BW60-07S Specification



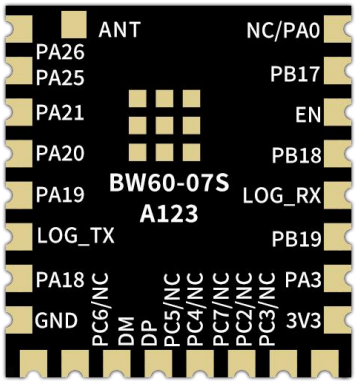

Product Series: Wi-Fi Series

Product Model: BW60-07S

Version: V1.0.2

Copyright: ©2026

Document Language: English

Release Date: 2026-11-17

Confidentiality Level: Public Document

Manufacturer: Shenzhen Ai-Thinker Technology Co., Ltd.

Keywords: RTL8711FA, Dual-Core Cortex-M55-Compatible Architecture, Up to 240MHz Clock Frequency, Wi-Fi 6, BLE 5.4, Dual-Band 2.4GHz/5GHz, IEEE 802.11a/b/g/n/ac/ax

Copyright © 2026 Shenzhen Ai-Thinker Technology Co., Ltd. All rights reserved.

Document Revision History

Version	Date	Created / Revised Content	Prepared by	Approved by
V1.0.0	2026-09-22	First edition	Wang Yeqing	Guan Ning
V1.0.1	2026-11-12	1. Updated the main chip architecture diagram (Figure 1) and the application reference circuit (Figure 8). 2. Added descriptions of peripherals, application scenarios, and security features. 3. Updated the power consumption table data and changed the recommended power supply current to above 800mA. 4. Added the description of the pin_mux document to the pin definition table. 5. Added the RF regulatory limit table for various countries and regions.	Wang Yeqing	Guan Ning
V1.0.2	2026-11-17	Added a note to the pin definitions: PA25 and PA26 are the default AT UART communication pins in the AT firmware.	Wang Yeqing	Guan Ning

Copyright © 2026 Shenzhen Ai-Thinker Technology Co., Ltd. All rights reserved.

Contents

1 Product Overview 5
1.1 Features 6
1.2 Application Scenarios 8
2 Key Specifications 9
3 Electrical Characteristics 10
3.1 Recommended Operating Conditions 10
3.2 I/O DC Electrical Characteristics 10
3.3 Electrostatic Discharge 10
3.4 Wi-Fi RF Performance 11
3.5 BLE RF Performance 12
3.6 Power Consumption 14
4 Mechanical Specifications 15
4.1 Module Dimensions 15
4.2 Shield Cover Marking Information 16
4.3 External Antenna Connector Dimensions 17
5 Pin Definition 18
6 Schematic 20
7 Design Guide 21
7.1 Application Reference Circuit 21
7.2 Recommended PCB Footprint Dimensions 22
7.3 Power Supply 23
7.4 GPIO 24
8 Storage Conditions 25
9 Reflow Soldering Profile 25
10 Packaging Information 26
11 Contact Us 26
Disclaimer 27

Copyright © 2026 Shenzhen Ai-Thinker Technology Co., Ltd. All rights reserved.

List of Figures

Figure 1 Main Chip Architecture Diagram 5
Figure 2 ESD Protection Diagram 10
Figure 3 Module Dimensions (Unit: mm) 15
Figure 4 Shield Cover Marking Information 16
Figure 5 External Antenna Connector Dimensions (Unit: mm) 17
Figure 6 Pin Diagram 18
Figure 7 Schematic 20
Figure 8 Application Reference Circuit 21
Figure 9 Recommended PCB Footprint Dimensions (Unit: mm) 22
Figure 10 DC-DC Buck Circuit 23
Figure 11 Level-Shifting Circuit 24
Figure 12 Reflow Soldering Profile 25
Figure 13 Tape and Reel Packaging Diagram 26

List of Tables

Table 1 Key Specifications 9
Table 2 Recommended Operating Conditions 10
Table 3 I/O DC Electrical Characteristics 10
Table 4 Wi-Fi RF Performance 11
Table 5 BLE RF Performance 12
Table 6 RF Regulatory Limits by Country / Region 13
Table 7 Power Consumption 14
Table 8 Pin Function Definition 18

Copyright © 2026 Shenzhen Ai-Thinker Technology Co., Ltd. All rights reserved.

1 Product Overview

The BW60-07S is a dual-band Wi-Fi + BLE SoC module developed by Shenzhen Ai-Thinker Technology Co., Ltd. based on the RTL8711FA series chip. It integrates Wi-Fi 6 and BLE 5.4, supporting 2.4GHz and 5GHz dual bands and 802.11a/b/g/n/ac/ax protocols. The RTL8711FA integrates dual RISC cores compatible with the Arm Cortex-M55 instruction set and based on Armv8.1-M architecture. With a maximum clock frequency of 240MHz, it features fine-grained clock gating, multi-power modes and dynamic power adjustment, balancing high performance and ultra-low power consumption.

The BW60-07S module features a rich set of peripheral interfaces, integrating general-purpose and sensor interfaces such as UART, SPI, I2C, CAN, ADC, RMII, capacitive touch, and temperature control. It is equipped with high-speed SDIO and USB interfaces, as well as RGB, DMIC, and I2S audio/video interfaces. The GPIOs are flexibly configurable. It can be widely applied in IoT, mobile devices, wearable electronics, smart home and other scenarios.

Figure 1 shows the RTL8711FA main chip architecture.

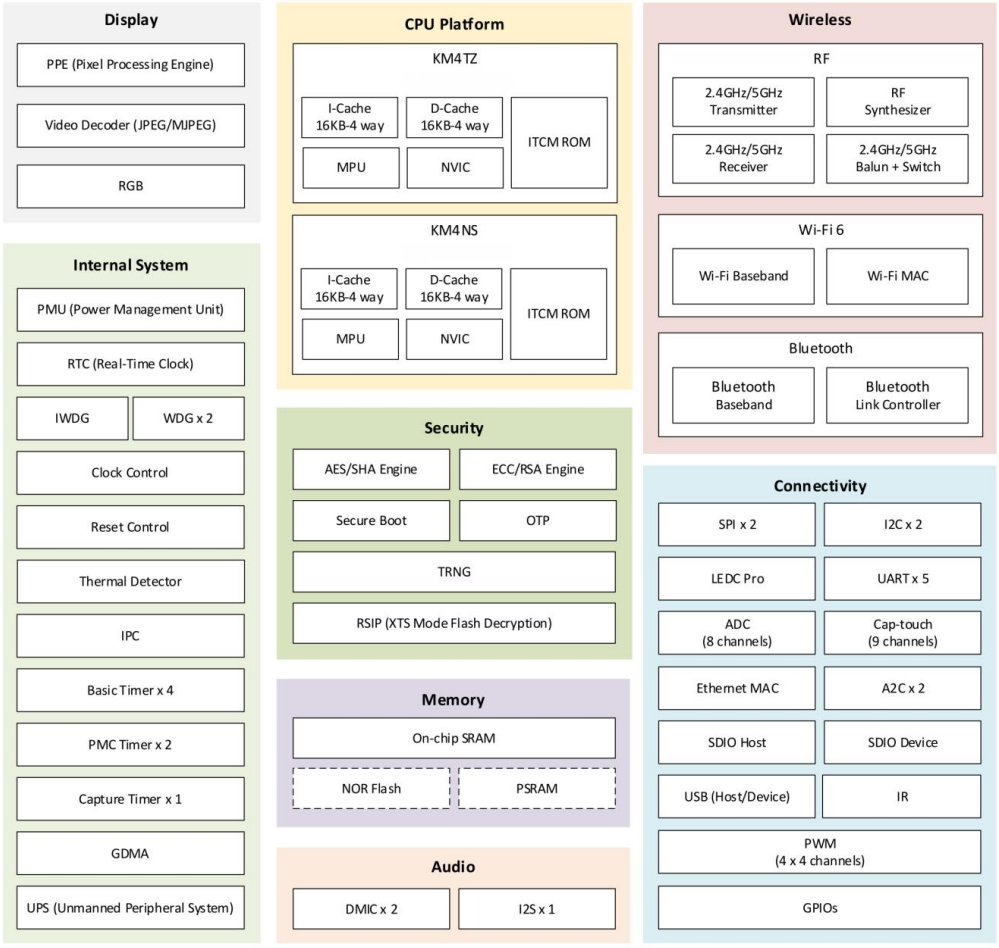

Figure 1 Main Chip Architecture Diagram

Copyright © 2026 Shenzhen Ai-Thinker Technology Co., Ltd. All rights reserved.

1.1 Features

Wireless

- 2.4GHz and 5GHz RF transceiver
- Supports 802.11a/b/g/n/ac/ax protocols
- Supports BLE 5.4
- Supports SIG Mesh 1.1
- Supports LE 1Mbps, 2Mbps
- Supports LE long-range (125kbps, 500kbps)
- Supports LE Advertising Extensions
- Supports TWT (Target Wake Time) for power saving

Microcontroller Subsystem

- Dual 32-bit RISC cores based on the Armv8.1-M architecture
- Compatible with the Arm Cortex-M55 instruction set
- Maximum clock frequency up to 240MHz

Memory

- 16KB I-Cache and 16KB D-Cache
- 512KB + 152KB SRAM
- 2KB OTP
- 4/8MB on-chip Flash in the RTL8711FA chip (optional)
- Supports external Flash expansion (customized)

Security

- Secure Boot
- AES/SHA engine
- ECC/RSA engine
- TRNG (True Random Number Generator)
- OTP

Copyright © 2026 Shenzhen Ai-Thinker Technology Co., Ltd. All rights reserved.

Peripherals

- Supports USB 2.0 HS (Host/Device), SPI, UART, ADC, CAN, I2C, I2S, DMIC, RGB/MCU interface, PWM, SDIO, LEDC, IR, RMII (supports Ethernet MAC, applicable to Ethernet port and gateway applications), Cap-touch and GPIO, etc.

Package Type

- Adopts SMD-25 package

Development Environment

- Supports secondary development with integrated Linux development environment

Power Consumption

- Receive current: 58mA (average)
- Transmit current: 2.4GHz, 802.11ax, MCS9, POUT=+13dBm, Duty 100%: 238mA (average)
- Transmit current: 5GHz, 802.11ax, MCS9, POUT=+13dBm, Duty 100%: 295mA (average)
- Deep-sleep current: 10μA

Physical Characteristics

- Module dimensions (L × W × H): 17.00 × 16.00 × 3.20mm
- Antenna type: IPEX Gen 4 connector or PAD antenna (optional)
- Operating temperature: -40 – 85°C
- Storage conditions: -40 – 125°C, < 90% RH

Electrical Characteristics

- Supply voltage: 2.97 – 3.63V (typical value 3.3V); integrated DC-DC and LDO
- Supply current: ≥ 800mA
- Communication interface: standard UART interface
- Available I/Os: 21 GPIOs by default
- Protection: built-in ESD protection circuit

Note: For features not marked, please refer to the official RTL8711FA chip datasheet.

Copyright © 2026 Shenzhen Ai-Thinker Technology Co., Ltd. All rights reserved.

1.2 Application Scenarios

- Smart Home
- Educational/Children's Toys
- Industrial Equipment Interaction
- Wearable Electronics
- Internet of Things (IoT)
- Audio Multimedia
- Mobile Devices
- Gateway applications

Copyright © 2026 Shenzhen Ai-Thinker Technology Co., Ltd. All rights reserved.

2 Key Specifications

Table 1 summarizes the key electrical and physical parameters of the BW60-07S module.

Table 1 Key Specifications

Model	BW60-07S
Package	SMD-25
Dimensions	17.00 × 16.00 × 3.20mm
Antenna Type	IPEX Gen 4 connector or PAD antenna (optional)
Frequency Range	2400 – 2483.5MHz and 5180 – 5825MHz
Operating Temperature	-40 – 85℃
Storage Conditions	-40 – 125℃, <90% RH
Power Supply Range	Supply voltage 2.97 – 3.63V, typical 3.3V, supply current ≥800mA
Available I/Os	21 by default
UART Baud Rate	115200bps by default
Security	WPS/WEP/WPA/WPA2/WPA3
Flash	4MByte by default, up to 16MByte

Copyright © 2026 Shenzhen Ai-Thinker Technology Co., Ltd. All rights reserved.

3 Electrical Characteristics

3.1 Recommended Operating Conditions

Table 2 lists the recommended operating electrical parameters of the BW60-07S module. Operating outside these ranges may cause device damage.

Table 2 Recommended Operating Conditions

Symbol	Parameter	Min	Typ	Max	Unit
VCC	Supply Voltage	2.97	3.3	3.63	V
I	Supply Current	800	-	-	mA

3.2 I/O DC Electrical Characteristics

Table 3 lists the I/O DC characteristics of the BW60-07S module. These parameters are mainly used for external interface level matching and GPIO circuit design.

Table 3 I/O DC Electrical Characteristics

Symbol	Parameter	Min	Typ	Max	Unit
VIH	High-level Input Voltage	2	-	-	V
VIL	Low-level Input Voltage	-0.3	-	0.8	V
VOH	High-level Output Voltage	0.85 × VDD	-	-	V
VOL	Low-level Output Voltage	-	-	0.15 × VDD	V
I_{IN}	I/O Input Leakage Current	-	-	100	nA

3.3 Electrostatic Discharge

Figure 2 shows the ESD protection diagram. BW60-07S is an ESD-sensitive device and requires special precautions during handling.



Figure 2 ESD Protection Diagram

Copyright © 2026 Shenzhen Ai-Thinker Technology Co., Ltd. All rights reserved.

3.4 Wi-Fi RF Performance

Table 4 lists the Wi-Fi RF performance parameters of the BW60-07S module. RF performance parameters are measured under typical test conditions. Actual performance may be affected by the antenna, power supply, PCB layout, test environment, and other factors.

Table 4 Wi-Fi RF Performance

Description	Typ			Unit
Frequency Range	2400 – 2483.5			MHz
2.4GHz Output Power				
Mode	**Min**	**Typ**	**Max**	**Unit**
802.11b, 1Mbps	-	21	-	dBm
802.11b, 11Mbps	-	18	-	dBm
802.11g, 6Mbps	-	20	-	dBm
802.11g, 54Mbps	-	18	-	dBm
802.11n, HT20 (MCS7)	-	18	-	dBm
802.11ax, HE20 (MCS9)	-	16	-	dBm
2.4GHz Receiver Sensitivity				
Mode	**Min**	**Typ**	**Max**	**Unit**
802.11b, 1Mbps	-	-99	-	dBm
802.11b, 11Mbps	-	-90	-	dBm
802.11g, 6Mbps	-	-95	-	dBm
802.11g, 54Mbps	-	-77	-	dBm
802.11n, HT20 (MCS7)	-	-75.5	-	dBm
802.11ax, HE20 (MCS9)	-	-68.5	-	dBm
Description	**Typ**			**Unit**
Frequency Range	5180 – 5825			MHz
5GHz Output Power				
Mode	**Min**	**Typ**	**Max**	**Unit**

Copyright © 2026 Shenzhen Ai-Thinker Technology Co., Ltd. All rights reserved.

802.11a, 6Mbps	-	18	-	dBm
802.11a, 54Mbps	-	18	-	dBm
802.11n, HT20 (MCS7)	-	18	-	dBm
802.11ax, HE20 (MCS9)	-	16	-	dBm
5GHz Receiver Sensitivity				
Mode	**Min**	**Typ**	**Max**	**Unit**
802.11a, 6Mbps	-	-94	-	dBm
802.11a, 54Mbps	-	-77	-	dBm
802.11n, HT20 (MCS7)	-	-75	-	dBm
802.11ax, HE20 (MCS9)	-	-68	-	dBm

3.5 BLE RF Performance

Table 5 lists the BLE RF performance parameters of the BW60-07S module. RF performance parameters are measured under typical test conditions. Actual performance may be affected by the antenna, power supply, PCB layout, test environment, and other factors.

Table 5 BLE RF Performance

Description	**Typ**			**Unit**
Frequency Range	2400 – 2483.5			MHz
Output Power				
Data Rate Mode	**Min**	**Typ**	**Max**	**Unit**
1Mbps	-	8	15	dBm
2Mbps	-	8	15	dBm
Receiver Sensitivity				
Data Rate Mode	**Min**	**Typ**	**Max**	**Unit**
1Mbps Sensitivity @30.8% PER	-	-97	-	dBm
2Mbps Sensitivity @30.8% PER	-	-94	-	dBm

Copyright © 2026 Shenzhen Ai-Thinker Technology Co., Ltd. All rights reserved.

Table 6 lists the regulatory requirements for transmit power in common countries and regions. The product must be configured strictly in accordance with applicable regulations. The configurable 5GHz transmit power range is -24dBm to +18dBm, while the configurable 2.4GHz transmit power range is -24dBm to +21dBm.

Table 6 RF Regulatory Limits by Country / Region

Country / Region	Regulation	Operating Band	Power Limit
Mainland China	Document No. 129 (2021)	2400 – 2483.5MHz	EIRP ≤ 20dBm
Mainland China	Document No. 129 (2021)	5150 – 5250MHz	EIRP ≤ 23dBm
Mainland China	Document No. 129 (2021)	5725 – 5850MHz	EIRP ≤ 33dBm
European Union	CE	2400 – 2483.5MHz	EIRP ≤ 20dBm
European Union	CE	5150 – 5350MHz	EIRP ≤ 23dBm
European Union	CE	5470 – 5725MHz	EIRP ≤ 30dBm
European Union	CE	5725 – 5875MHz	EIRP ≤ 14dBm
North America	FCC	2400 – 2483.5MHz	Conducted ≤ 30dBm
North America	FCC	5150 – 5250MHz	Conducted ≤ 24dBm
North America	FCC	5250 – 5350MHz	Conducted ≤ 24dBm
North America	FCC	5470 – 5725MHz	Conducted ≤ 24dBm
North America	FCC	5725 – 5850MHz	Conducted ≤ 30dBm

Notes:

- EIRP (dBm) = Pt (dBm) − Cable Loss (dB) + Antenna Gain (dBi)
- FCC regulations limit the conducted power at the antenna port.

For questions regarding the above configuration, please contact Ai-Thinker.

Copyright © 2026 Shenzhen Ai-Thinker Technology Co., Ltd. All rights reserved.

3.6 Power Consumption

Table 7 lists the power consumption data of the BW60-07S module in different modes. The following power consumption data are measured under a 3.3V power supply and 25℃ ambient temperature.

- The POUT power for all transmit modes is measured at the antenna interface.
- All transmission data are measured at 100% duty cycle in continuous transmit mode.

Table 7 Power Consumption

Mode	Min	Avg	Max	Unit
TX 802.11b, 11Mbps, POUT=+18dBm	-	285	-	mA
TX 802.11g, 54Mbps, POUT=+15dBm	-	256	-	mA
TX 802.11n (2.4GHz), MCS7, POUT=+15dBm	-	256	-	mA
TX 802.11n (5GHz), MCS7, POUT=+15dBm	-	295	-	mA
TX 802.11ax (2.4GHz), MCS9, POUT=+13dBm	-	238	-	mA
TX 802.11ax (5GHz), MCS9, POUT=+13dBm	-	295	-	mA
RX 802.11b, Packet Length 1500 Bytes	-	49	-	mA
RX 802.11g, Packet Length 1500 Bytes	-	52	-	mA
RX 802.11a, Packet Length 1500 Bytes	-	58	-	mA
RX 802.11n (2.4GHz), Packet Length 1500 Bytes	-	53	-	mA
RX 802.11n (5GHz), Packet Length 1500 Bytes	-	58	-	mA
RX 802.11ac, Packet Length 1500 Bytes	-	58	-	mA
RX 802.11ax (2.4GHz), Packet Length 1500 Bytes	-	53	-	mA
RX 802.11ax (5GHz), Packet Length 1500 Bytes	-	58	-	mA
Deep-Sleep	-	10	-	μA

Copyright © 2026 Shenzhen Ai-Thinker Technology Co., Ltd. All rights reserved.

4 Mechanical Specifications

4.1 Module Dimensions

Figure 3 shows the outline dimensions of the BW60-07S module. The outline dimensions (L × W × H) are 17.00 × 16.00 × 3.20mm. The dimensional tolerance is ±0.20mm.

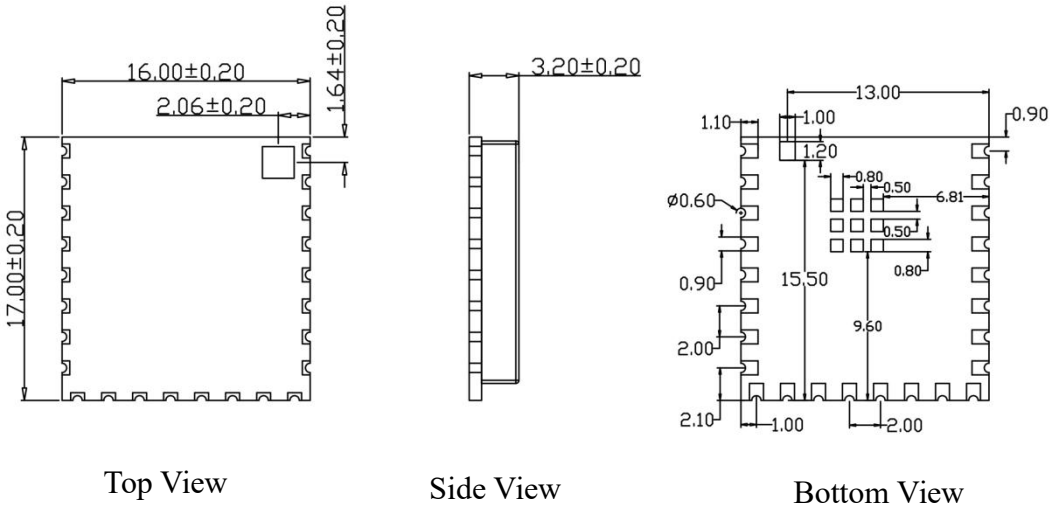

Figure 3 Module Dimensions (Unit: mm)

Copyright © 2026 Shenzhen Ai-Thinker Technology Co., Ltd. All rights reserved.

4.2 Shield Cover Marking Information

Figure 4 shows the shield cover marking information of the BW60-07S module. Each character corresponds to module configuration information such as Flash size, and temperature version.

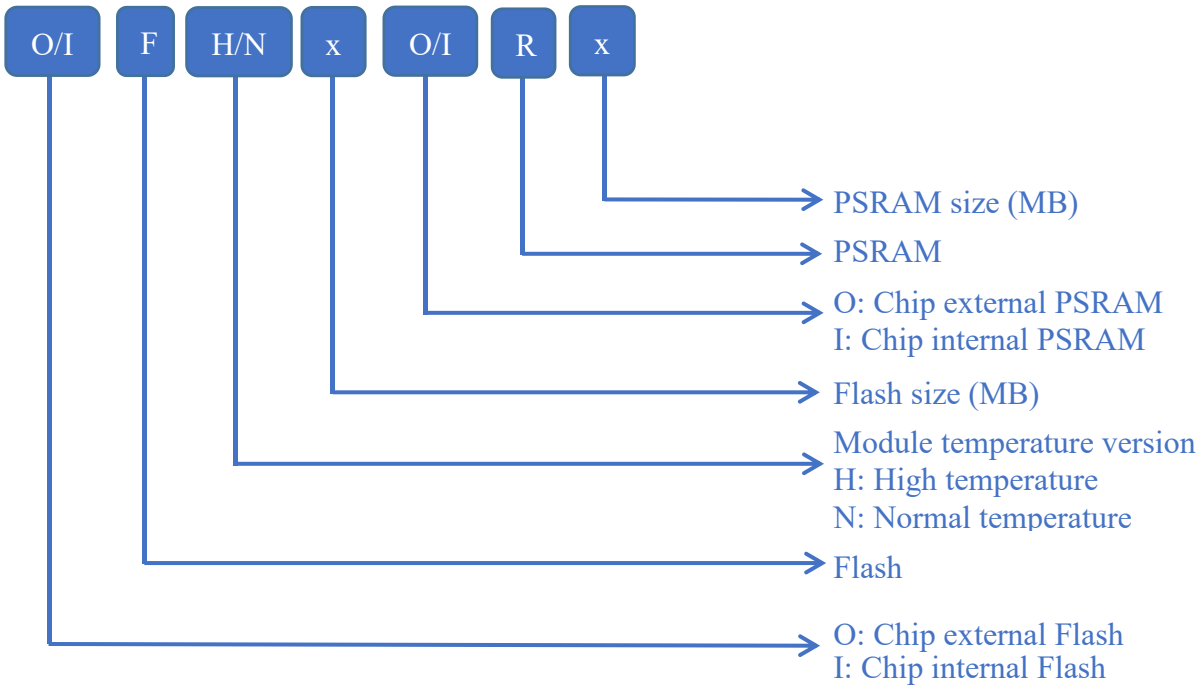

Figure 4 Shield Cover Marking Information

Copyright © 2026 Shenzhen Ai-Thinker Technology Co., Ltd. All rights reserved.

4.3 External Antenna Connector Dimensions

Figure 5 shows the engineering drawing of the IPEX antenna connector used with BW60-07S.

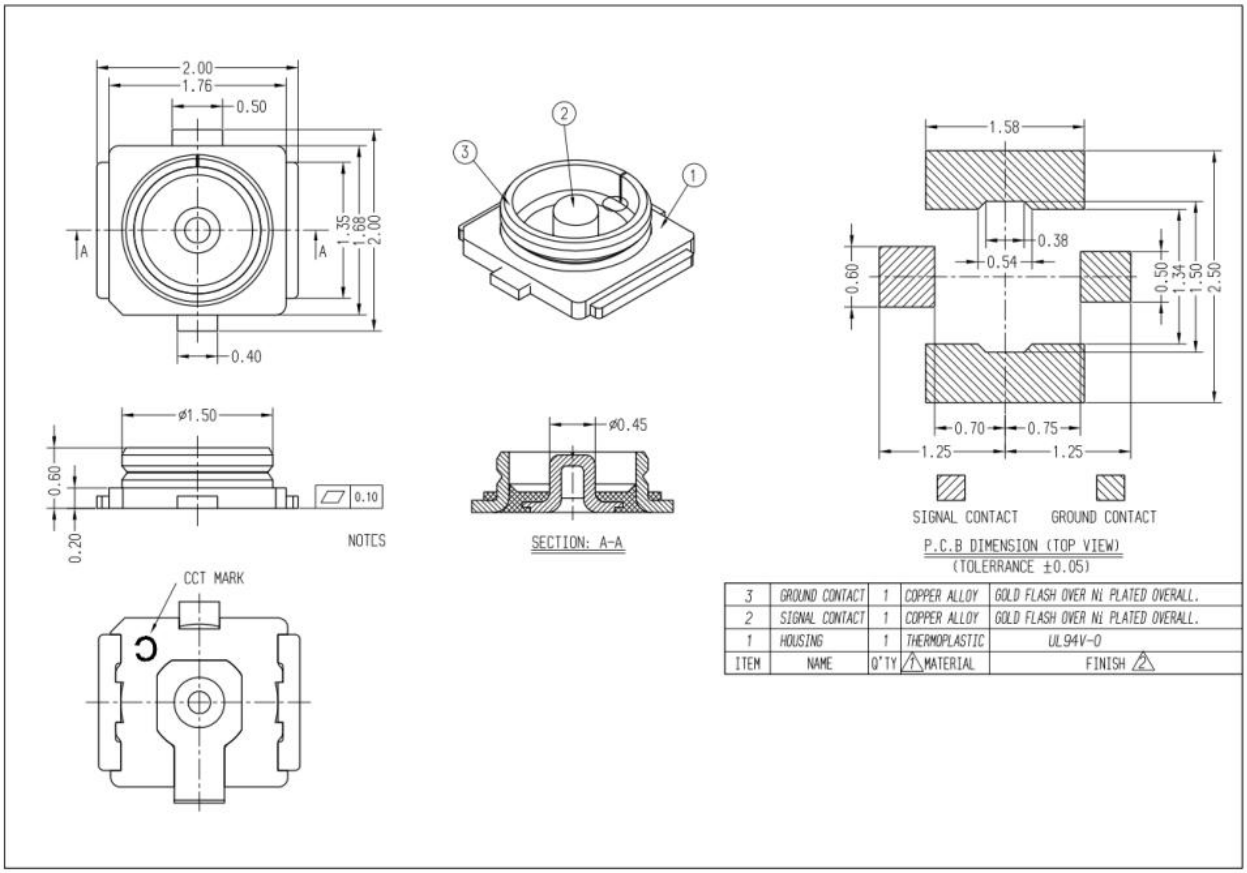

Figure 5 External Antenna Connector Dimensions (Unit: mm)

Copyright © 2026 Shenzhen Ai-Thinker Technology Co., Ltd. All rights reserved.

5 Pin Definition

Figure 6 shows the top and bottom views of the BW60-07S module's pin layout, with a total of 25 pins exposed.

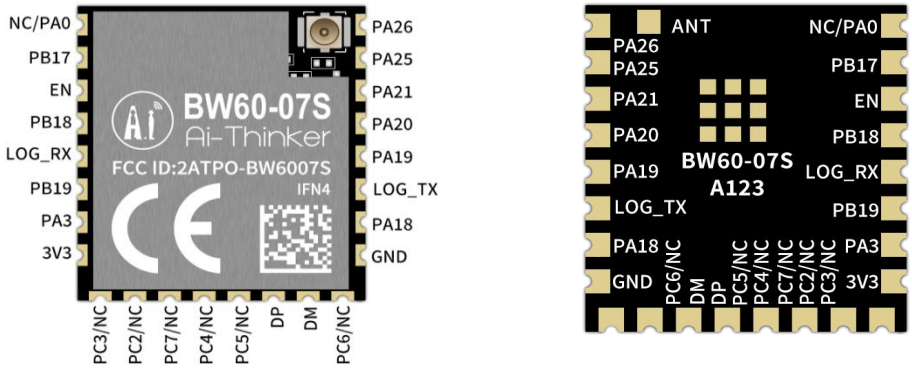

Top View

Bottom View

Figure 6 Pin Diagram

Table 8 defines the pin functions of the BW60-07S module, including pin number, pin name, and function description.

Table 8 Pin Function Definition

No.	Name	Function
1	NC/PA0	GPIO/WAKE_PIN3; unavailable on versions with internal PSRAM due to internal multiplexing.
2	PB17	GPIO/RMII_RXERR
3	EN	Chip enable; active high.
4	PB18	GPIO/RMII_REF_CLK/SWD_CLK
5	LOG_RX	PA2/OTP_DIS/WAKE_PIN1; programming UART and LOG_RX pin.
6	PB19	GPIO/RMII_RXD1/SWD_DAT
7	PA3	GPIO/WAKE_PIN0
8	3V3	3.3V supply (VCC); the external power supply output current is recommended to be above 800mA.
9	PC3/NC	GPIO/RMII_TXD1/SPI1_MOSI/SD_D0; on the external Flash version, this I/O is shared with the on-chip Flash and is not brought out.
10	PC2/NC	GPIO/RMII_TXEN/SPI1_CLK/SD_D2; on the external Flash version, this I/O is shared with the on-chip Flash and is not brought out.

Copyright © 2026 Shenzhen Ai-Thinker Technology Co., Ltd. All rights reserved.

11	PC7/NC	GPIO/RMII_RXD0/SD_CLK; on the external Flash version, this I/O is shared with the on-chip Flash and is not brought out.
12	PC4/NC	GPIO/RMII_TXD0/SPI1_MISO/SD_D1; on the external Flash version, this I/O is shared with the on-chip Flash and is not brought out.
13	PC5/NC	SPIC(0/1)_FLASH_CLK/GPIO/RMII_CRS_DV/SPI1_CS/SD_D3; on the external Flash version, this I/O is shared with the on-chip Flash and is not brought out.
14	DP	PA4/HSDP/SPI0_CLK/SWD_CLK/SD_D2
15	DM	PA5/HSDM/SPI0_MOSI/SWD_DAT/SD_D0
16	PC6/NC	SPIC(0/1)_FLASH_D0/RMII_RXD1/SD_CMD; on the external Flash version, this I/O is shared with the on-chip Flash and is not brought out.
17	GND	Ground
18	PA18	GPIO/ADC2_TOUCH2/TSSI_0/SPI0_MISO/SWD_CLK/SD_CLK
19	LOG_TX	PB20/UD_DIS; programming UART and LOG_TX pin; also used for boot configuration. See notes below.
20	PA19	GPIO/ADC1_TOUCH1/TSSI_1/SPI0_CS/SWD_DAT/SD_CMD
21	PA20	GPIO/ADC0_TOUCH0/SD_D1
22	PA21	GPIO/TOUCH8/SD_D3
23	PA25	AT_UART_RXD/GPIO/TSSI_0/RMII_RXERR
24	PA26	AT_UART_TXD/GPIO/TSSI_1/RMII_REF_CLK/SD_D3
25	ANT	PAD antenna port; the PAD antenna is not brought out on IPEX versions.

Notes:

1. This table lists only some commonly used multiplexed functions. For detailed pin descriptions, please refer to the Realtek_RTL8711F_pin_mux table.
2. Whether pins marked NC (no connection) are available depends on the internal PSRAM and Flash configuration of the module. On the internal PSRAM version, PA0 is unavailable. On the external Flash version, PC2, PC3, PC4, PC5, PC6, and PC7 are unavailable.
3. If LOG_TX is low at the moment of power-on, the module enters programming mode. If LOG_TX is high at the moment of power-on, the module boots normally. The module has an internal pull-up by default.
4. Do not pull PA3 low at the moment of power-on. Pulling it low during boot will cause the module to enter Test Mode.
5. Do not pull PB18 low at the moment of power-on. Pulling it low will cause the NOR Flash to fail to boot. The module has an internal pull-up by default.

Copyright © 2026 Shenzhen Ai-Thinker Technology Co., Ltd. All rights reserved.

6 Schematic

Figure 7 shows the schematic of the BW60-07S module, integrating RF antenna port, power supply, clock, and reserved peripheral interfaces.

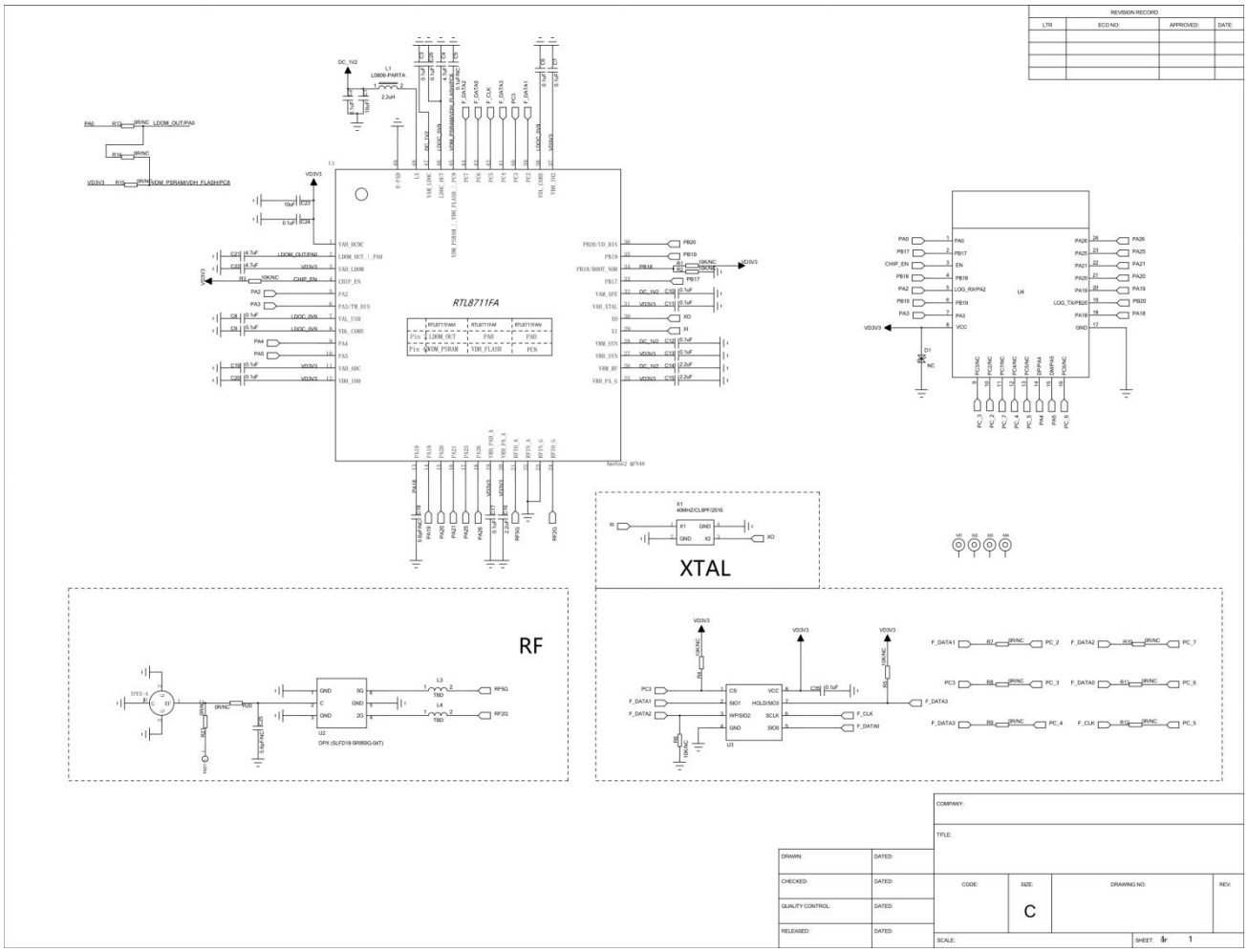

Figure 7 Schematic

Copyright © 2026 Shenzhen Ai-Thinker Technology Co., Ltd. All rights reserved.

7 Design Guide

7.1 Application Reference Circuit

Figure 8 shows the hardware application reference circuit of the BW60-07S module, showing the UART communication, power supply, enable control, and firmware download interfaces.

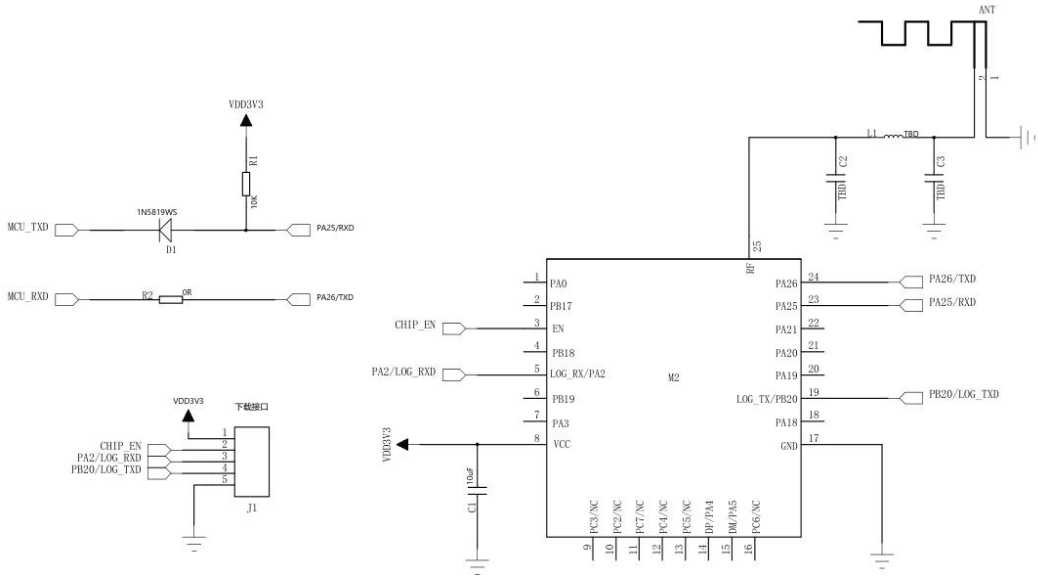

Figure 8 Application Reference Circuit

Notes on the Application Reference Circuit:

- LOG_TX is the boot control pin. When high, the module is in normal operating mode. When low, the module is in firmware programming mode. The chip is internally pulled high by default.
- VCC supply voltage range: 2.97 – 3.63V. The external power supply output current is recommended to be above 800mA.
- The power-on timing requirements for PA3 and PB18 must be met in the design.

Copyright © 2026 Shenzhen Ai-Thinker Technology Co., Ltd. All rights reserved.

7.2 Recommended PCB Footprint Dimensions

Figure 9 shows the recommended PCB footprint dimensions of the BW60-07S module. The pad dimensions (L × W) are 2.20 × 0.90mm. The center-to-center spacing between adjacent pads is 2.00mm.

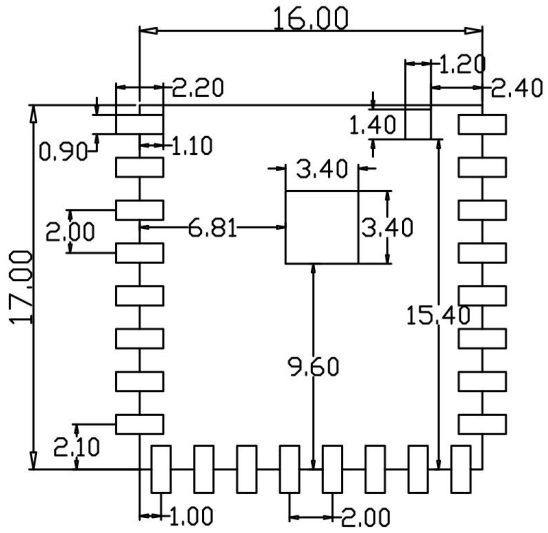

Figure 9 Recommended PCB Footprint Dimensions (Unit: mm)

Copyright © 2026 Shenzhen Ai-Thinker Technology Co., Ltd. All rights reserved.

7.3 Power Supply

Figure 10 shows a DC-DC buck power supply circuit converting 12V to 3.3V, with a maximum output current of 2A.

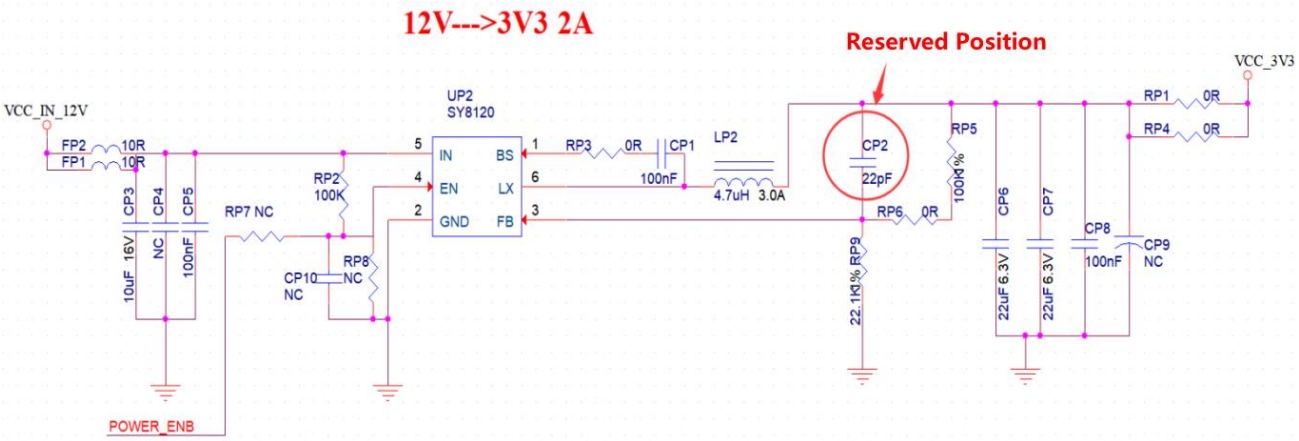

Figure 10 DC-DC Buck Circuit

Notes on the DC-DC Buck Circuit:

- Recommended VCC voltage: 3.3V; recommended current ≥800mA.
- An LDO is recommended for power supply; if using DC-DC, the ripple should be controlled within 30mV.
- For the DC-DC power supply circuit, it is recommended to reserve space for dynamic response capacitors to optimize output ripple under large load transients.
- It is recommended to add ESD protection devices to the power interface.

Copyright © 2026 Shenzhen Ai-Thinker Technology Co., Ltd. All rights reserved.

7.4 GPIO

Figure 11 shows a 3.3V and 5V bidirectional UART level-shifting circuit, which supports bidirectional serial communication across different voltage levels.

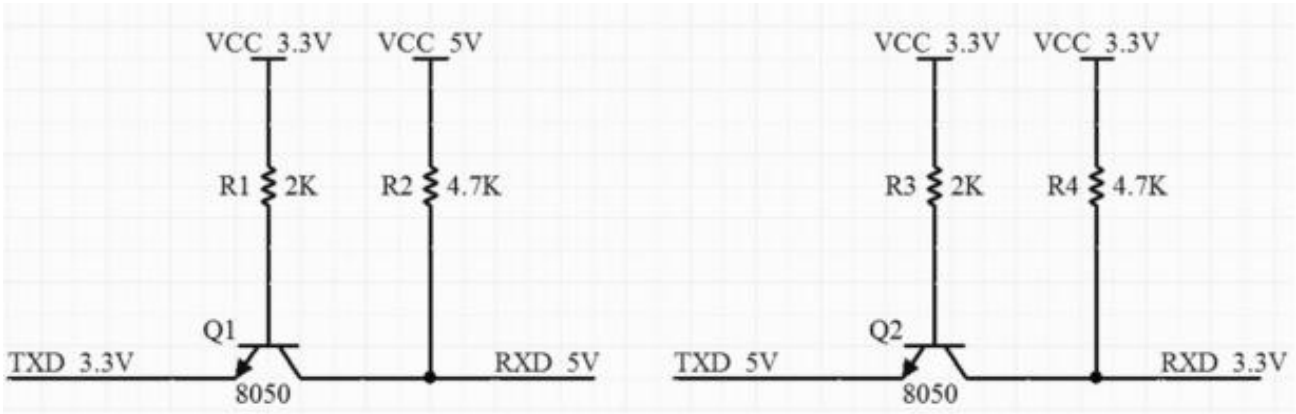

Figure 11 Level-Shifting Circuit

Notes on the Level-Shifting Circuit:

- Some I/O pins are exposed on the module. To use these I/O pins, it is recommended to connect a 10 – 100Ω resistor in series with each I/O pin. This helps suppress overshoot, stabilize signal levels, and benefits both EMI and ESD protection.
- The pull-up or pull-down configuration for special I/O pins must refer to the instructions in the specification, as it affects the module boot configuration.
- The module I/O pins level is 3.3V. If the host controller I/O voltage level does not match the module, a level-shifting circuit should be added.
- If an I/O pin is directly connected to a peripheral interface or pin headers, it is recommended to reserve space for an ESD protection device near the connector on the I/O trace.

Copyright © 2026 Shenzhen Ai-Thinker Technology Co., Ltd. All rights reserved.

8 Storage Conditions

Products sealed in moisture barrier bags should be stored in a non-condensing atmosphere at < 40℃ and < 90% RH.

The moisture sensitivity level (MSL) of the module is level 3.

The module must be used within 168 hours after vacuum bag removal under conditions of 25±5℃ and 60% RH. Otherwise, the module requires baking before being returned to production.

9 Reflow Soldering Profile

Figure 12 shows the module reflow soldering process profile. The process is divided into four stages: ramp-up zone, preheat/soak zone, reflow soldering zone and cooling zone.

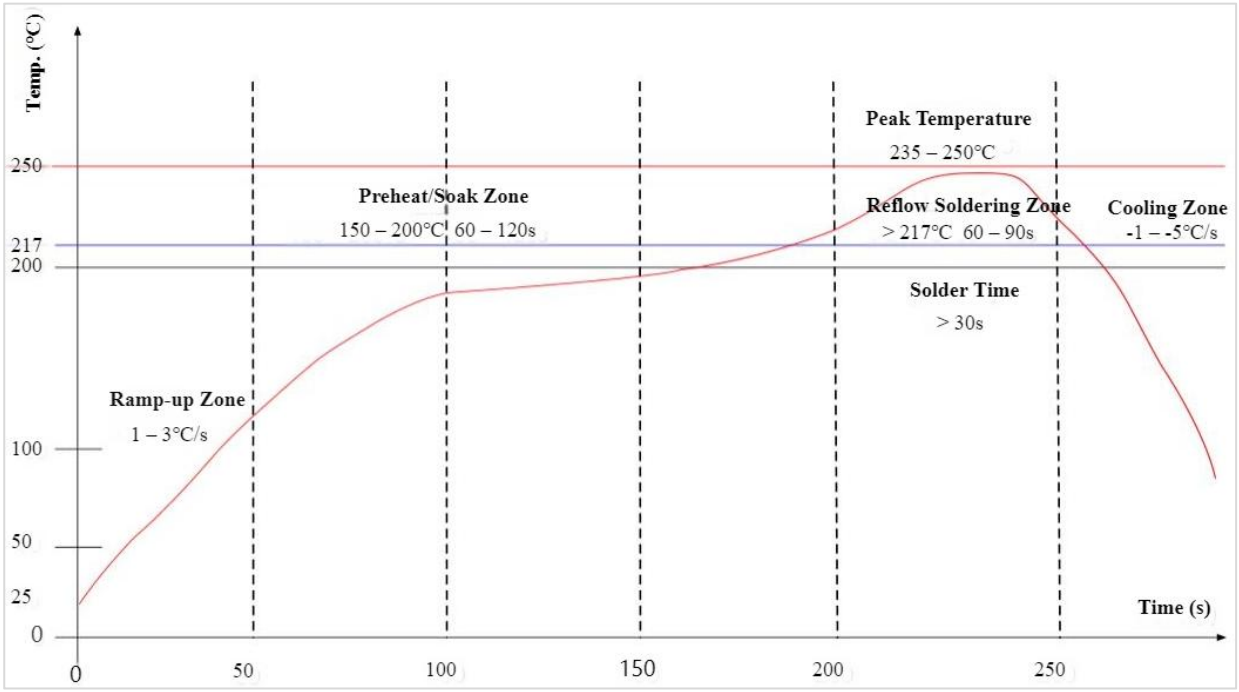

Figure 12 Reflow Soldering Profile

Reflow Soldering Profile Description:

- Ramp-up zone – Temperature: 25 – 150℃, Time: 60 – 90s, Ramp rate: 1 – 3℃/s
- Preheat/soak zone – Temperature: 150 – 200℃, Time: 60 – 120s
- Reflow soldering zone – Temperature: > 217℃, Time: 60 – 90s, Peak temperature: 235 – 250℃, Time: 30 – 70s
- Cooling zone – Temperature: peak temperature to 180℃, Cooling rate: -1 – -5℃/s
- Solder – Sn-Ag-Cu lead-free solder alloy (SAC305)

Copyright © 2026 Shenzhen Ai-Thinker Technology Co., Ltd. All rights reserved.

10 Packaging Information

Figure 13 shows the packaging of the BW60-07S module. The module is packed in tape-and-reel, 800 pcs/reel.



Figure 13 Tape and Reel Packaging Diagram

11 Contact Us

Official Website Official Forum Development DOCS LinkedIn

Tmall Store Taobao Store Alibaba Store

Technical Support: support@aithinker.com

Domestic Business Cooperation: sales@aithinker.com

Overseas Business Cooperation: overseas@aithinker.com

Company Address: Room 403–405, 408–410, Building C, Huafeng Smart Innovation Port, Gushu, Xixiang, Bao'an District, Shenzhen, Guangdong, China

Contact Hotline: 0755-29162996

WeChat Mini Program

WeChat Official Account

Copyright © 2026 Shenzhen Ai-Thinker Technology Co., Ltd. All rights reserved.

Disclaimer

The data contained in this specification are typical test values obtained by Ai-Thinker laboratory and are provided for reference only. Actual performance may vary depending on the application environment and shall be subject to actual verification. Ai-Thinker reserves the right to modify this document at any time. Please refer to the official documentation website for the latest version. To the maximum extent permitted by applicable laws and regulations, Ai-Thinker shall not be liable for any losses arising from the use of this specification. All trademarks mentioned herein are the property of their respective owners. No part of this specification may be reproduced or used for commercial promotion without prior written permission. This specification does not grant any license to any intellectual property rights.

Copyright © 2026 Shenzhen Ai-Thinker Technology Co., Ltd. All rights reserved.