BW60-12F Specification

Version V1.1.2

Copyright ©2026

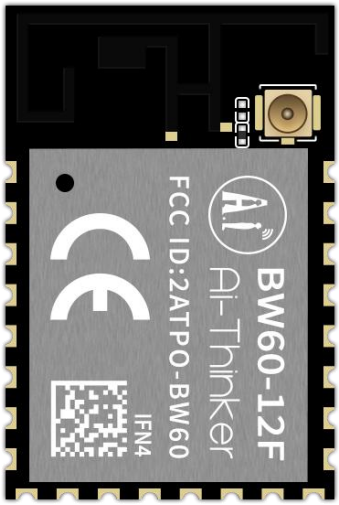

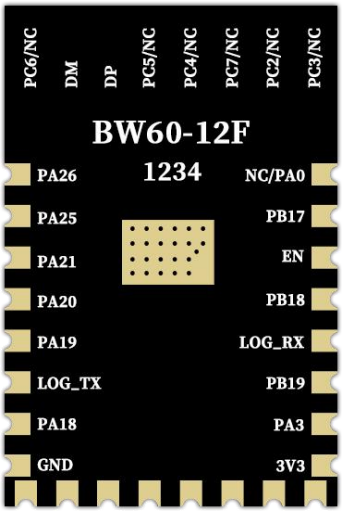

Copyright © 2026 Shenzhen Ai-Thinker Technology Co., Ltd. All Rights Reserved

Document Revision History

Version	Date	Created / Revised Content	Prepared by	Approved by
V1.0.0	2026-04-09	First edition	Wang Yeqing	Guan Ning
V1.1.0	2026-10-22	1. Updated the PCB chip package to a 9-grid layout. 2. Updated the data and descriptions in the product overview, specifications, features, power consumption, and other sections.	Wang Yeqing	Guan Ning
V1.1.1	2026-11-12	1. Updated the main chip architecture diagram (Figure 1). 2. Added descriptions of peripherals, application scenarios, and security features. 3. Changed the recommended power supply current to above 800mA. 4. Added the description of the pin_mux document to the pin definition table. 5. Added the RF regulatory limit table for various countries and regions.	Wang Yeqing	Guan Ning
V1.1.2	2026-11-17	Added a note to the pin definitions: PA25 and PA26 are the default AT UART communication pins in the AT firmware.	Wang Yeqing	Guan Ning

Copyright © 2026 Shenzhen Ai-Thinker Technology Co., Ltd. All Rights Reserved

Contents

1 Product Overview 5
1.1 Features 6
1.2 Application Scenarios 8
2 Key Specifications 9
3 Electrical Characteristics 10
3.1 Recommended Operating Conditions 10
3.2 I/O DC Electrical Characteristics 10
3.3 Electrostatic Discharge 10
3.4 Wi-Fi RF Performance 11
3.5 BLE RF Performance 12
3.6 Power Consumption 14
4 Mechanical Specifications 15
4.1 Module Dimensions 15
4.2 Shield Cover Marking Information 15
4.3 External Antenna Connector Dimensions 16
5 Pin Definition 17
6 Schematic 19
7 Antenna Parameters 20
7.1 Antenna Test Prototype 20
7.2 Antenna S-Parameters 20
7.3 Antenna Gain and Efficiency 21
7.4 Antenna Pattern Diagram 21
8 Design Guide 23
8.1 Application Reference Circuit 23
8.2 Recommended PCB Footprint Dimensions 24
8.3 Antenna Layout Requirements 24
8.4 Power Supply 25
8.5 GPIO 25
9 Storage Conditions 26
10 Reflow Soldering Profile 26
11 Packaging Information 27
12 Contact Us 27
Disclaimer and Copyright Notice 28
Notice 28
Important Statement 29

Copyright © 2026 Shenzhen Ai-Thinker Technology Co., Ltd. All Rights Reserved

List of Figures

Figure 1 Main Chip Architecture Diagram 5
Figure 2 ESD Protection Symbol 10
Figure 3 Module Dimensions (Unit: mm) 15
Figure 4 Shield Cover Marking Information 15
Figure 5 External Antenna Connector Dimensions (Unit: mm) 16
Figure 6 Pin Diagram 17
Figure 7 Schematic 19
Figure 8 Antenna Test Prototype 20
Figure 9 Antenna S-Parameters 20
Figure 10 Antenna Pattern Diagram (2.4GHz) 21
Figure 11 Antenna Pattern Diagram (5GHz) 22
Figure 12 Application Reference Circuit 23
Figure 13 Recommended PCB Footprint Dimensions (Unit: mm) 24
Figure 14 Antenna Layout Diagram 24
Figure 15 DC-DC Buck Circuit 25
Figure 16 Level-Shifting Circuit 25
Figure 17 Reflow Soldering Profile 26
Figure 18 Tape and Reel Packaging Diagram 27

List of Tables

Table 1 Key Specifications 9
Table 2 Recommended Operating Conditions 10
Table 3 I/O DC Electrical Characteristics 10
Table 4 Wi-Fi RF Performance 11
Table 5 BLE RF Performance 12
Table 6 RF Regulatory Limits by Country / Region 13
Table 7 Power Consumption 14
Table 8 Pin Function Definitions 17
Table 9 Antenna Gain and Efficiency 21

Copyright © 2026 Shenzhen Ai-Thinker Technology Co., Ltd. All Rights Reserved

1 Product Overview

The BW60-12F is a dual-band Wi-Fi + BLE SoC module developed by Shenzhen Ai-Thinker Technology Co., Ltd. based on the RTL8711FA chip series. It integrates Wi-Fi 6 and BLE 5.4, supporting 2.4GHz and 5GHz dual bands and 802.11a/b/g/n/ac/ax protocols. The RTL8711FA integrates dual RISC cores compatible with Arm Cortex-M55 instruction set and based on Armv8.1-M architecture. With a maximum clock frequency of 240MHz, it features fine-grained clock gating, multi-power modes and dynamic power adjustment, balancing high performance and ultra-low power consumption.

The BW60-12F module features a rich set of peripheral interfaces, integrating general-purpose and sensor interfaces such as UART, SPI, I2C, CAN, ADC, RMII, capacitive touch, and temperature control. It is equipped with high-speed SDIO and USB interfaces, as well as RGB, DMIC, and I2S audio/video interfaces. The GPIOs are flexibly configurable. It can be widely applied in IoT, mobile devices, wearable electronics, smart home and other scenarios.

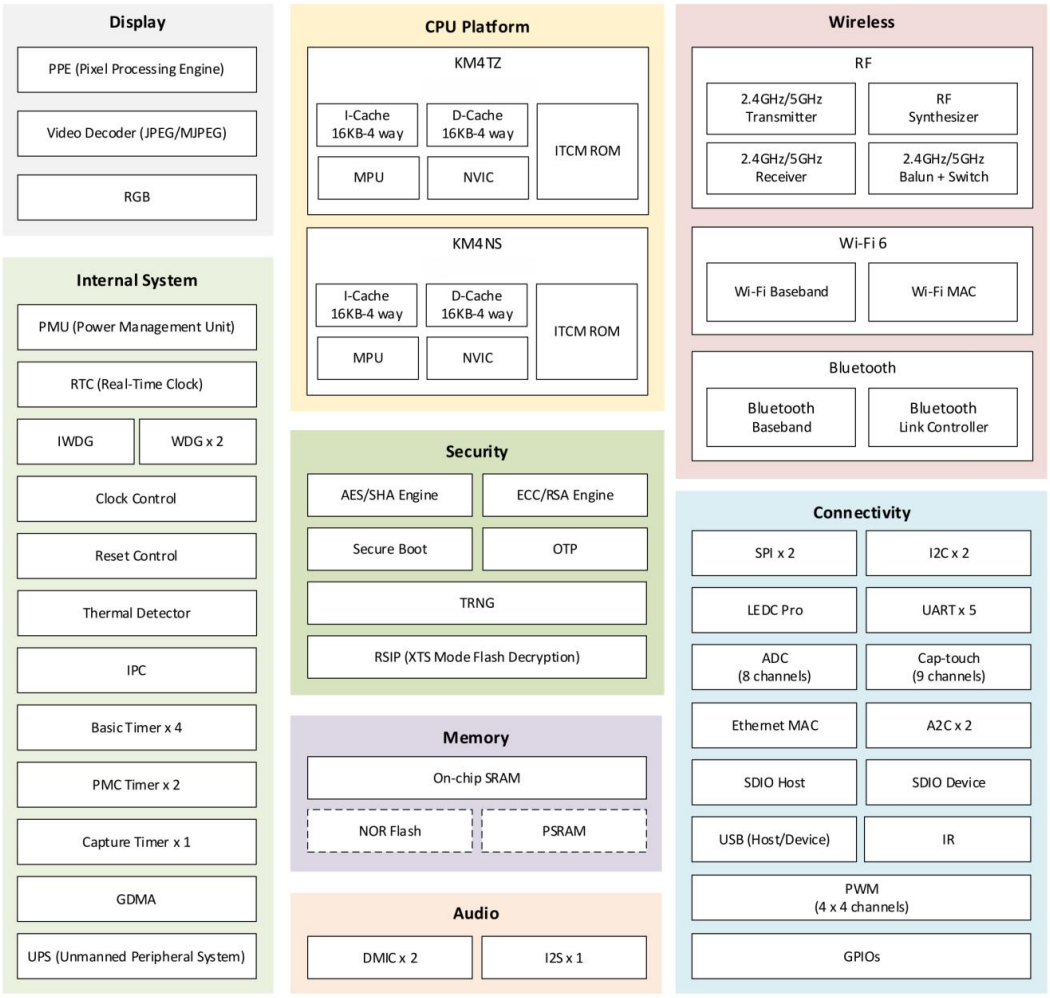

Figure 1 Main Chip Architecture Diagram

Copyright © 2026 Shenzhen Ai-Thinker Technology Co., Ltd. All Rights Reserved

1.1 Features

Wireless

- 2.4GHz and 5GHz RF transceiver
- Supports 802.11a/b/g/n/ac/ax protocols
- Supports BLE 5.4
- Supports SIG Mesh 1.1
- Supports LE 1Mbps, 2Mbps
- Supports LE long-range (125kbps, 500kbps)
- Supports LE Advertising Extensions
- Supports TWT (Target Wake Time) for power saving

Microcontroller Subsystem

- Dual 32-bit RISC cores based on the Armv8.1-M architecture
- Compatible with the Arm Cortex-M55 instruction set
- Maximum clock frequency up to 240MHz

Memory

- 16KB I-Cache and 16KB D-Cache
- 512KB + 152KB SRAM
- 2KB OTP
- RTL8711FA with integrated 4/8MB Flash (optional)
- Supports external Flash expansion (customized)

Security

- Secure Boot and Secure Debug
- AES/SHA Engine
- ECC/RSA Engine
- TRNG (True Random Number Generator)
- OTP

Copyright © 2026 Shenzhen Ai-Thinker Technology Co., Ltd. All Rights Reserved

Peripherals

- Supports USB 2.0 HS (Host/Device), SPI, UART, ADC, CAN, I2C, I2S, DMIC, RGB/MCU interface, PWM, SDIO, LEDC, IR, RMII (supports Ethernet MAC, applicable to Ethernet port and gateway applications), Cap-touch and GPIO, etc.

Package Type

- Adopts SMD-24 package

Development Environment

- Supports secondary development with integrated Linux development environment

Power Consumption

- Receive current: 58mA (average)
- Transmit current: 2.4GHz, 802.11ax, MCS9, POUT=+13dBm, Duty 100%: 226mA (average)
- Transmit current: 5GHz, 802.11ax, MCS9, POUT=+13dBm, Duty 100%: 291mA (average)
- Deep-sleep current: 10μA

Physical Characteristics

- Module dimensions (L × W × H): 24.00 × 16.00 × 3.20mm
- Antenna type: onboard antenna or IPEX Gen 1 connector (optional)
- Operating temperature: -40 – 85℃
- Storage conditions: -40 – 125℃, < 90% RH

Electrical Characteristics

- Supply voltage: 2.97 – 3.63V (typical value 3.3V); integrated DC-DC and LDO
- Supply current: ≥ 800mA
- Communication interface: standard UART interface
- Available I/Os: 21 GPIOs by default
- Protection: built-in ESD protection circuit

Note: For features not marked, please refer to the official RTL8711FA chip datasheet.

Copyright © 2026 Shenzhen Ai-Thinker Technology Co., Ltd. All Rights Reserved

1.2 Application Scenarios

- Smart Home
- Educational/Children's Toys
- Industrial Equipment Interaction
- Wearable Electronics
- Internet of Things (IoT)
- Audio Multimedia
- Mobile Devices
- Gateway applications

Copyright © 2026 Shenzhen Ai-Thinker Technology Co., Ltd. All Rights Reserved

2 Key Specifications

Table 1 Key Specifications

Model	BW60-12F
Package	SMD-24
Dimensions	24.00 × 16.00 × 3.20mm
Antenna Type	Onboard antenna or IPEX Gen 1 connector (optional)
Frequency Range	2400 – 2483.5MHz and 5180 – 5825MHz
Operating Temperature	-40 – 85℃
Storage Conditions	-40 – 125℃, <90% RH
Power Supply Range	Supply voltage 2.97 – 3.63V; typical 3.3V; supply current ≥800mA
Available I/Os	21 by default
UART Baud Rate	115200bps by default
Security	WPS/WEP/WPA/WPA2/WPA3
Flash	4MByte by default, up to 16MByte

Copyright © 2026 Shenzhen Ai-Thinker Technology Co., Ltd. All Rights Reserved

3 Electrical Characteristics

3.1 Recommended Operating Conditions

Table 2 Recommended Operating Conditions

Symbol	Parameter	Min	Typ	Max	Unit
VDD	Supply Voltage	2.97	3.3	3.63	V
I	Supply Current	800	-	-	mA

3.2 I/O DC Electrical Characteristics

Table 3 I/O DC Electrical Characteristics

Symbol	Parameter	Min	Typ	Max	Unit
VIH	High-level Input Voltage	2	-	-	V
VIL	Low-level Input Voltage	-0.3	-	0.8	V
VOH	High-level Output Voltage	0.85 × VDD	-	-	V
VOL	Low-level Output Voltage	-	-	0.15 × VDD	V
IIN	I/O Input Leakage Current	-	-	100	nA

3.3 Electrostatic Discharge

The BW60-12F is an ESD-sensitive device and requires special precautions during handling.



Figure 2 ESD Protection Symbol

Copyright © 2026 Shenzhen Ai-Thinker Technology Co., Ltd. All Rights Reserved

3.4 Wi-Fi RF Performance

Table 4 Wi-Fi RF Performance

Description	Typ			Unit
Frequency Range	2400 – 2483.5			MHz
2.4GHz Output Power				
Mode	**Min**	**Typ**	**Max**	**Unit**
802.11b, 1Mbps	-	21	-	dBm
802.11b, 11Mbps	-	20	-	dBm
802.11g, 6Mbps	-	20	-	dBm
802.11g, 54Mbps	-	18	-	dBm
802.11n, HT20 (MCS7)	-	18	-	dBm
802.11ax, HE20 (MCS9)	-	16	-	dBm
2.4GHz Receiver Sensitivity				
Mode	**Min**	**Typ**	**Max**	**Unit**
802.11b, 1Mbps	-	-99	-	dBm
802.11b, 11Mbps	-	-90	-	dBm
802.11g, 6Mbps	-	-95	-	dBm
802.11g, 54Mbps	-	-77	-	dBm
802.11n, HT20 (MCS7)	-	-76	-	dBm
802.11ax, HE20 (MCS9)	-	-68.5	-	dBm
Description	**Typ**			**Unit**
Frequency Range	5180 – 5825			MHz
5GHz Output Power				
Mode	**Min**	**Typ**	**Max**	**Unit**
802.11a, 6Mbps	-	18	-	dBm
802.11a, 54Mbps	-	18	-	dBm

Copyright © 2026 Shenzhen Ai-Thinker Technology Co., Ltd. All Rights Reserved

802.11n, HT20 (MCS7)	-	18	-	dBm
802.11ax, HE20 (MCS9)	-	16	-	dBm
5GHz Receiver Sensitivity				
Mode	**Min**	**Typ**	**Max**	**Unit**
802.11a, 6Mbps	-	-92	-	dBm
802.11a, 54Mbps	-	-74	-	dBm
802.11n, HT20 (MCS7)	-	-72	-	dBm
802.11ax, HE20 (MCS9)	-	-66	-	dBm

3.5 BLE RF Performance

Table 5 BLE RF Performance

Description	**Typ**			**Unit**
Frequency Range	2400 – 2483.5			MHz
Output Power				
Data Rate Mode	**Min**	**Typ**	**Max**	**Unit**
1Mbps	-	8	15	dBm
2Mbps	-	8	15	dBm
Receiver Sensitivity				
Data Rate Mode	**Min**	**Typ**	**Max**	**Unit**
1Mbps Sensitivity @ 30.8% PER	-	-97	-	dBm
2Mbps Sensitivity @ 30.8% PER	-	-94	-	dBm

Copyright © 2026 Shenzhen Ai-Thinker Technology Co., Ltd. All Rights Reserved

The following table lists the regulatory requirements for transmit power in common countries and regions. The product must be configured strictly in accordance with applicable regulations. The configurable 5GHz transmit power range is -24dBm to +18dBm, while the configurable 2.4GHz transmit power range is -24dBm to +21dBm.

Table 6 RF Regulatory Limits by Country / Region

Country / Region	Regulation	Operating Band	Power Limit
Mainland China	Document No. 129 (2021)	2400 – 2483.5MHz	EIRP ≤ 20dBm
Mainland China	Document No. 129 (2021)	5150 – 5250MHz	EIRP ≤ 23dBm
Mainland China	Document No. 129 (2021)	5725 – 5850MHz	EIRP ≤ 33dBm
European Union	CE	2400 – 2483.5MHz	EIRP ≤ 20dBm
European Union	CE	5150 – 5350MHz	EIRP ≤ 23dBm
European Union	CE	5470 – 5725MHz	EIRP ≤ 30dBm
European Union	CE	5725 – 5875MHz	EIRP ≤ 14dBm
North America	FCC	2400 – 2483.5MHz	Conducted ≤ 30dBm
North America	FCC	5150 – 5250MHz	Conducted ≤ 24dBm
North America	FCC	5250 – 5350MHz	Conducted ≤ 24dBm
North America	FCC	5470 – 5725MHz	Conducted ≤ 24dBm
North America	FCC	5725 – 5850MHz	Conducted ≤ 30dBm

Notes:

- EIRP (dBm) = Pt (dBm) − Cable Loss (dB) + Antenna Gain (dBi)
- FCC regulations limit the conducted power at the antenna port.

For questions regarding the above configuration, please contact Ai-Thinker.

Copyright © 2026 Shenzhen Ai-Thinker Technology Co., Ltd. All Rights Reserved

3.6 Power Consumption

The following power consumption data are measured under a 3.3V power supply and 25°C ambient temperature.

- The POUT power for all transmit modes is measured at the antenna interface.
- All transmission data are measured at 100% duty cycle in continuous transmit mode.

Table 7 Power Consumption

Mode	Min	Avg	Max	Unit
TX 802.11b, 11Mbps, POUT=+18dBm	-	275	-	mA
TX 802.11g, 54Mbps, POUT=+15dBm	-	243	-	mA
TX 802.11n (2.4GHz), MCS7, POUT=+15dBm	-	239	-	mA
TX 802.11n (5GHz), MCS7, POUT=+15dBm	-	313	-	mA
TX 802.11ax (2.4GHz), MCS9, POUT=+13dBm	-	226	-	mA
TX 802.11ax (5GHz), MCS9, POUT=+13dBm	-	291	-	mA
RX 802.11b, Packet Length 1500 Bytes	-	50	-	mA
RX 802.11g, Packet Length 1500 Bytes	-	53	-	mA
RX 802.11a, Packet Length 1500 Bytes	-	58	-	mA
RX 802.11n (2.4GHz), Packet Length 1500 Bytes	-	53	-	mA
RX 802.11n (5GHz), Packet Length 1500 Bytes	-	58	-	mA
RX 802.11ac, Packet Length 1500 Bytes	-	58	-	mA
RX 802.11ax (2.4GHz), Packet Length 1500 Bytes	-	53	-	mA
RX 802.11ax (5GHz), Packet Length 1500 Bytes	-	58	-	mA
Deep-Sleep	-	10	-	μA

Copyright © 2026 Shenzhen Ai-Thinker Technology Co., Ltd. All Rights Reserved

4 Mechanical Specifications

4.1 Module Dimensions

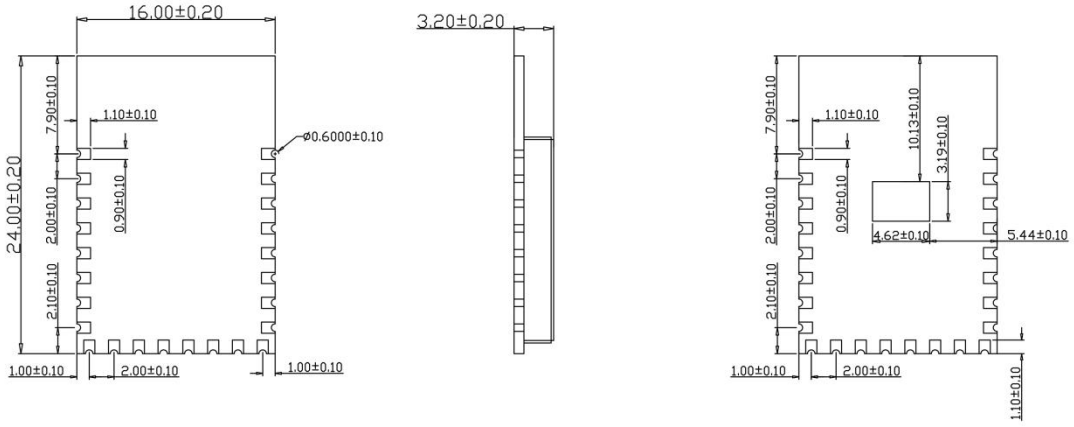

Top View Side View Bottom View

Figure 3 Module Dimensions (Unit: mm)

4.2 Shield Cover Marking Information

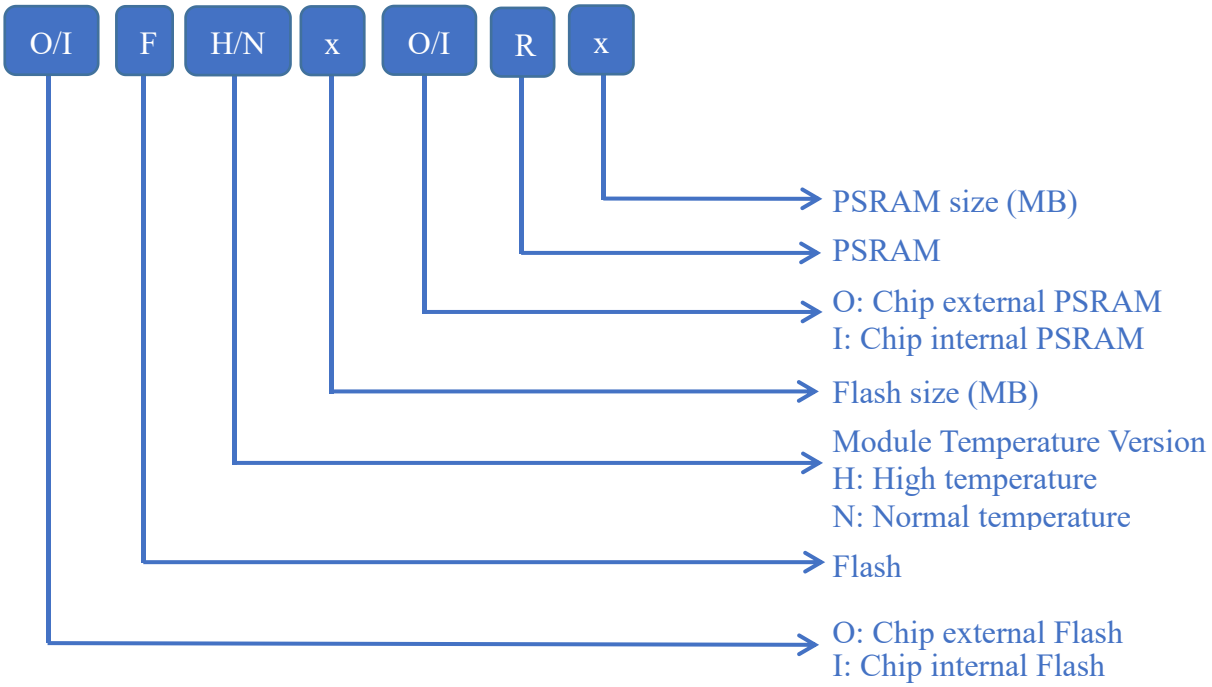

Figure 4 Shield Cover Marking Information

Copyright © 2026 Shenzhen Ai-Thinker Technology Co., Ltd. All Rights Reserved

4.3 External Antenna Connector Dimensions

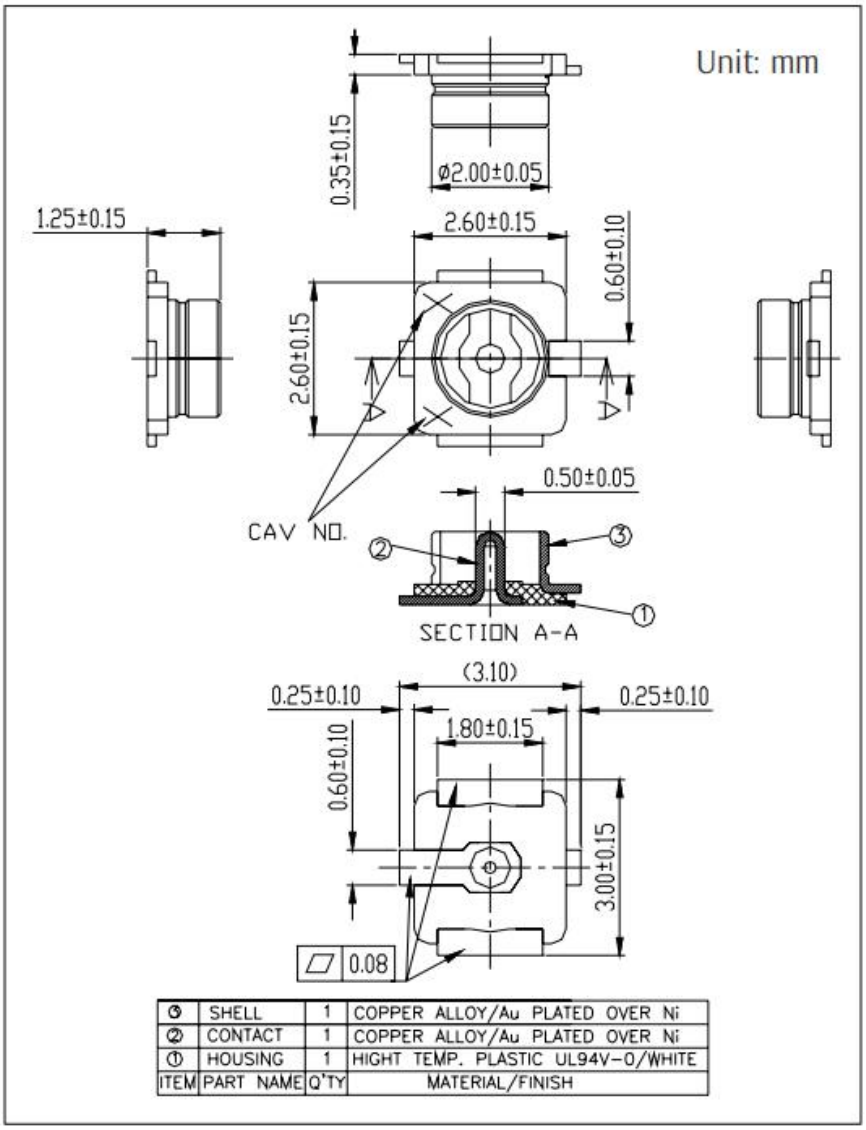

Figure 5 External Antenna Connector Dimensions (Unit: mm)

Copyright © 2026 Shenzhen Ai-Thinker Technology Co., Ltd. All Rights Reserved

5 Pin Definition

The BW60-12F module exposes a total of 24 pins, as shown in the pin diagram. The pin function definition table provides the detailed interface specifications.

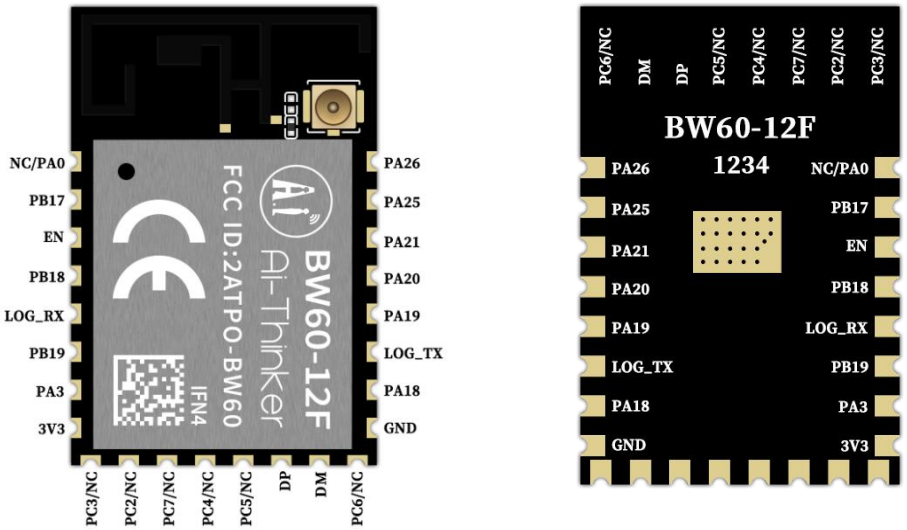

Top View　　Bottom View

Figure 6 Pin Diagram

Table 8 Pin Function Definitions

No.	Name	Function
1	NC/PA0	GPIO/WAKE_PIN3; unavailable on versions with internal PSRAM due to internal multiplexing.
2	PB17	GPIO/RMII_RXERR
3	EN	Chip enable pin, active high.
4	PB18	GPIO/RMII_REF_CLK/SWD_CLK
5	LOG_RX	PA2/OTP_DIS/WAKE_PIN1; programming UART and LOG_RX pin.
6	PB19	GPIO/RMII_RXD1/SWD_DAT
7	PA3	GPIO/WAKE_PIN0
8	3V3	3.3V supply (VDD); the external power supply output current is recommended to be above 800mA.
9	PC3/NC	GPIO/RMII_TXD1/SPI1_MOSI/SD_D0; on the external Flash version, this I/O is shared with the on-chip Flash and is not brought out.
10	PC2/NC	GPIO/RMII_TXEN/SPI1_CLK/SD_D2;

Copyright © 2026 Shenzhen Ai-Thinker Technology Co., Ltd. All Rights Reserved

		on the external Flash version, this I/O is shared with the on-chip Flash and is not brought out.
11	PC7/NC	GPIO/RMII_RXD0/SD_CLK; on the external Flash version, this I/O is shared with the on-chip Flash and is not brought out.
12	PC4/NC	GPIO/RMII_TXD0/SPI1_MISO/SD_D1; on the external Flash version, this I/O is shared with the on-chip Flash and is not brought out.
13	PC5/NC	SPIC(0/1)_FLASH_CLK/GPIO/RMII_CRS_DV/SPI1_CS/SD_D3; on the external Flash version, this I/O is shared with the on-chip Flash and is not brought out.
14	DP	PA4/HSDP/SPI0_CLK/SWD_CLK/SD_D2
15	DM	PA5/HSDM/SPI0_MOSI/SWD_DAT/SD_D0
16	PC6/NC	SPIC(0/1)_FLASH_D0/RMII_RXD1/SD_CMD; on the external Flash version, this I/O is shared with the on-chip Flash and is not brought out.
17	GND	Ground
18	PA18	GPIO/ADC2_TOUCH2/TSSI_0/SPI0_MISO/SWD_CLK/SD_CLK
19	LOG_TX	PB20/UD_DIS; Programming UART and LOG_TX pin; also used for boot configuration. See notes below.
20	PA19	GPIO/ADC1_TOUCH1/TSSI_1/SPI0_CS/SWD_DAT/SD_CMD
21	PA20	GPIO/ADC0_TOUCH0/SD_D1
22	PA21	GPIO/TOUCH8/SD_D3
23	PA25	AT_UART_RXD/GPIO/TSSI_0/RMII_RXERR
24	PA26	AT_UART_TXD/GPIO/TSSI_1/RMII_REF_CLK/SD_D3

Notes:

1. This table lists only some commonly used multiplexed functions. For detailed pin descriptions, please refer to the Realtek_RTL8711F_pin_mux table.
2. Whether pins marked NC (no connection) are available depends on the internal PSRAM and Flash configuration of the module. On the internal PSRAM version, PA0 is unavailable. On the external Flash version, PC2, PC3, PC4, PC5, PC6, and PC7 are unavailable.
3. If LOG_TX is low at the moment of power-on, the module enters programming mode. If LOG_TX is high at the moment of power-on, the module boots normally. The module has an internal pull-up by default.
4. Do not pull PA3 low at the moment of power-on. Pulling it low during boot will cause the module to enter Test Mode.
5. Do not pull PB18 low at the moment of power-on. Pulling it low will cause the NOR Flash to fail to boot. The module has an internal pull-up by default.

Copyright © 2026 Shenzhen Ai-Thinker Technology Co., Ltd. All Rights Reserved

6 Schematic

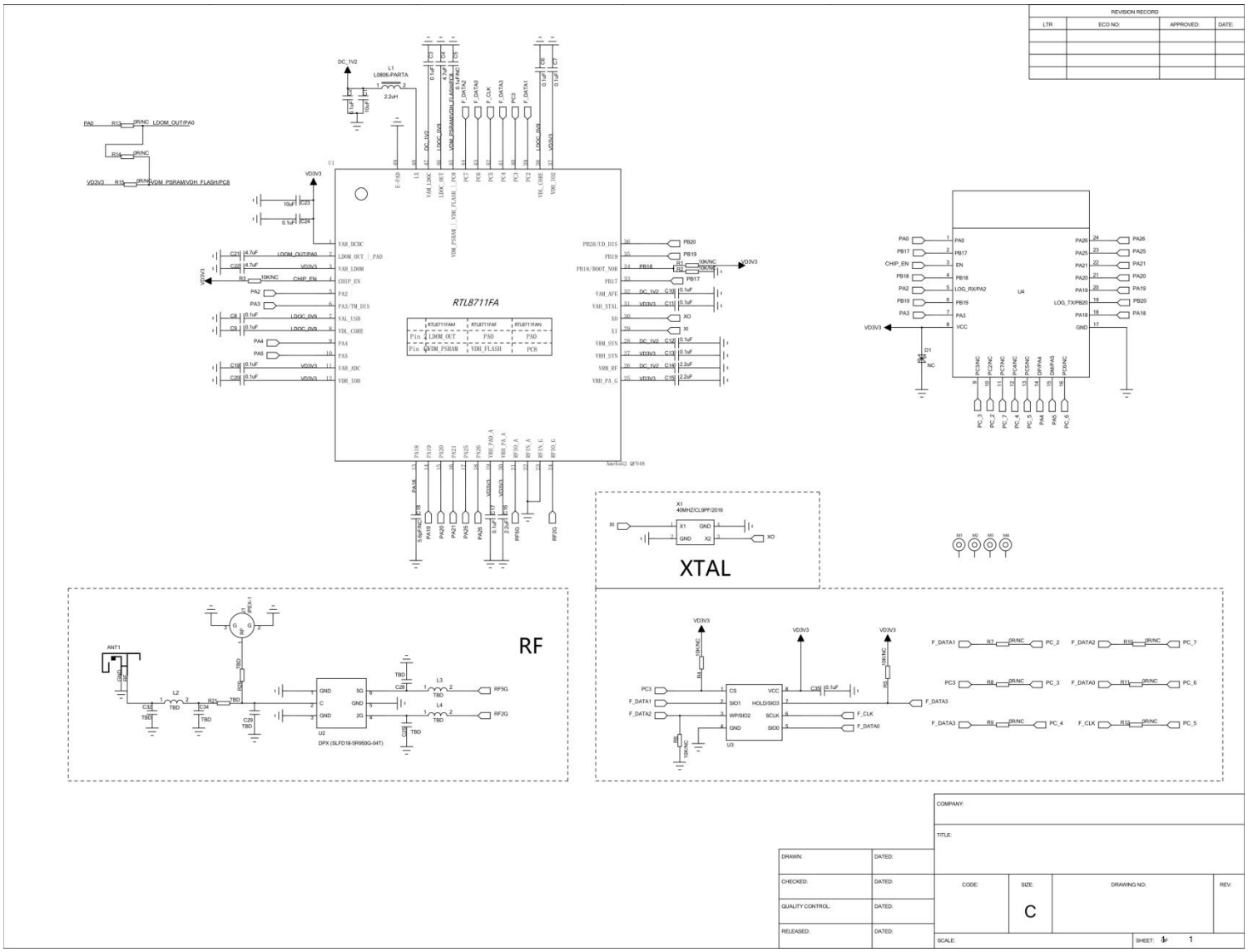

Figure 7 Schematic

Copyright © 2026 Shenzhen Ai-Thinker Technology Co., Ltd. All Rights Reserved

7 Antenna Parameters

7.1 Antenna Test Prototype

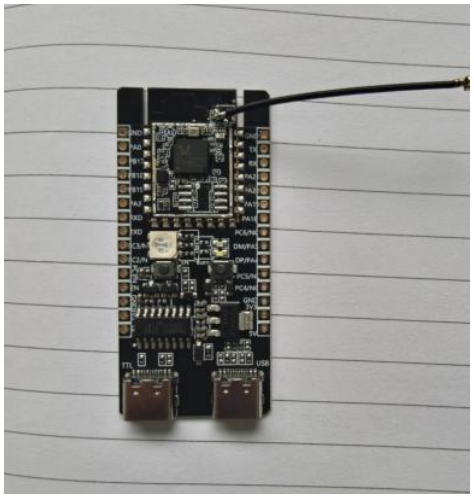

Figure 8 Antenna Test Prototype

7.2 Antenna S-Parameters

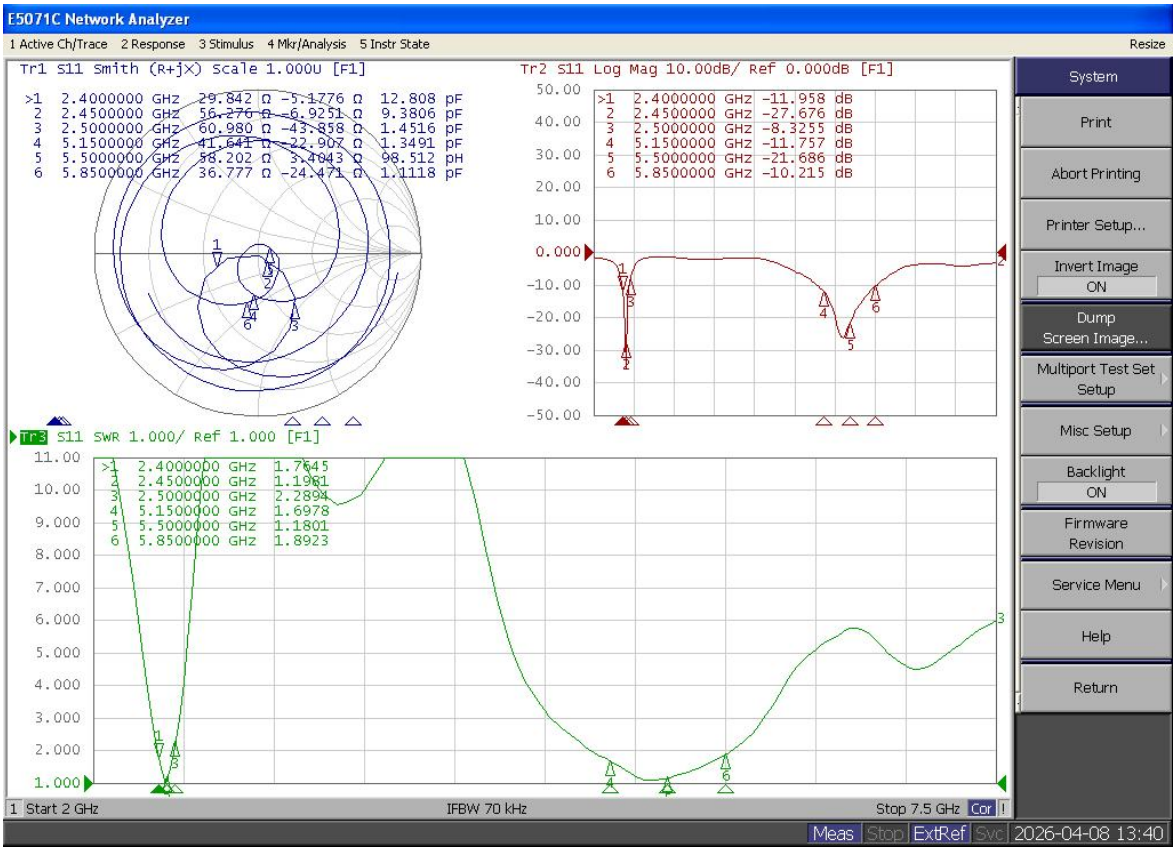

Figure 9 Antenna S-Parameters

Copyright © 2026 Shenzhen Ai-Thinker Technology Co., Ltd. All Rights Reserved

7.3 Antenna Gain and Efficiency

Table 9 Antenna Gain and Efficiency

No.	1	2	3	4	5	6	7	8	9	10	11
Frequency (MHz)	2400	2410	2420	2430	2440	2450	2460	2470	2480	2490	2500
Gain (dBi)	1.43	1.45	1.35	1.71	1.45	0.90	1.04	1.86	1.13	1.07	0.35
Efficiency (%)	46.03	46.91	45.16	45.80	44.79	43.74	43.75	44.09	42.29	41.12	38.45
Frequency (MHz)	5150	5250	5350	5450	5550	5650	5750	5850	-	-	-
Gain (dBi)	2.45	3.18	3.53	4.06	3.04	5.28	4.60	4.54	-	-	-
Efficiency (%)	52.37	58.29	61.85	72.25	61.02	62.50	63.49	60.62	-	-	-

7.4 Antenna Pattern Diagram

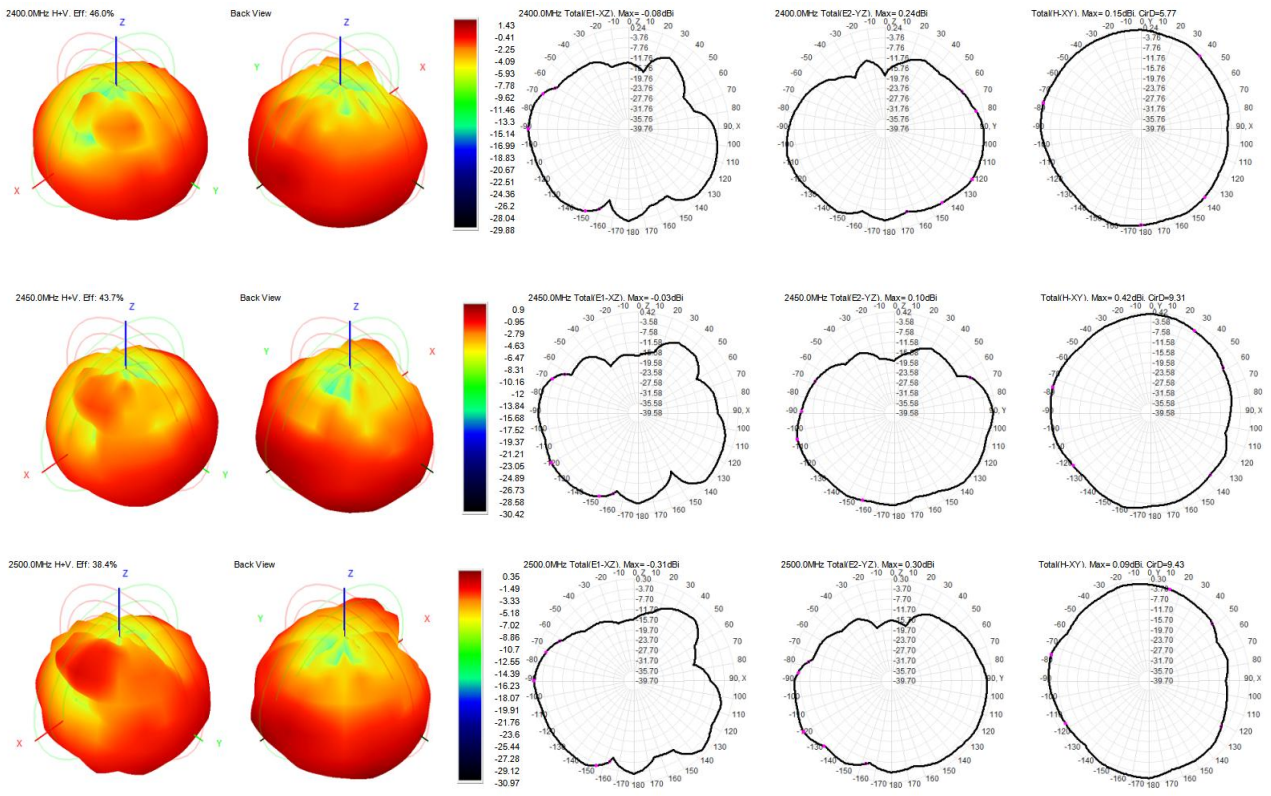

Figure 10 Antenna Pattern Diagram (2.4GHz)

Copyright © 2026 Shenzhen Ai-Thinker Technology Co., Ltd. All Rights Reserved

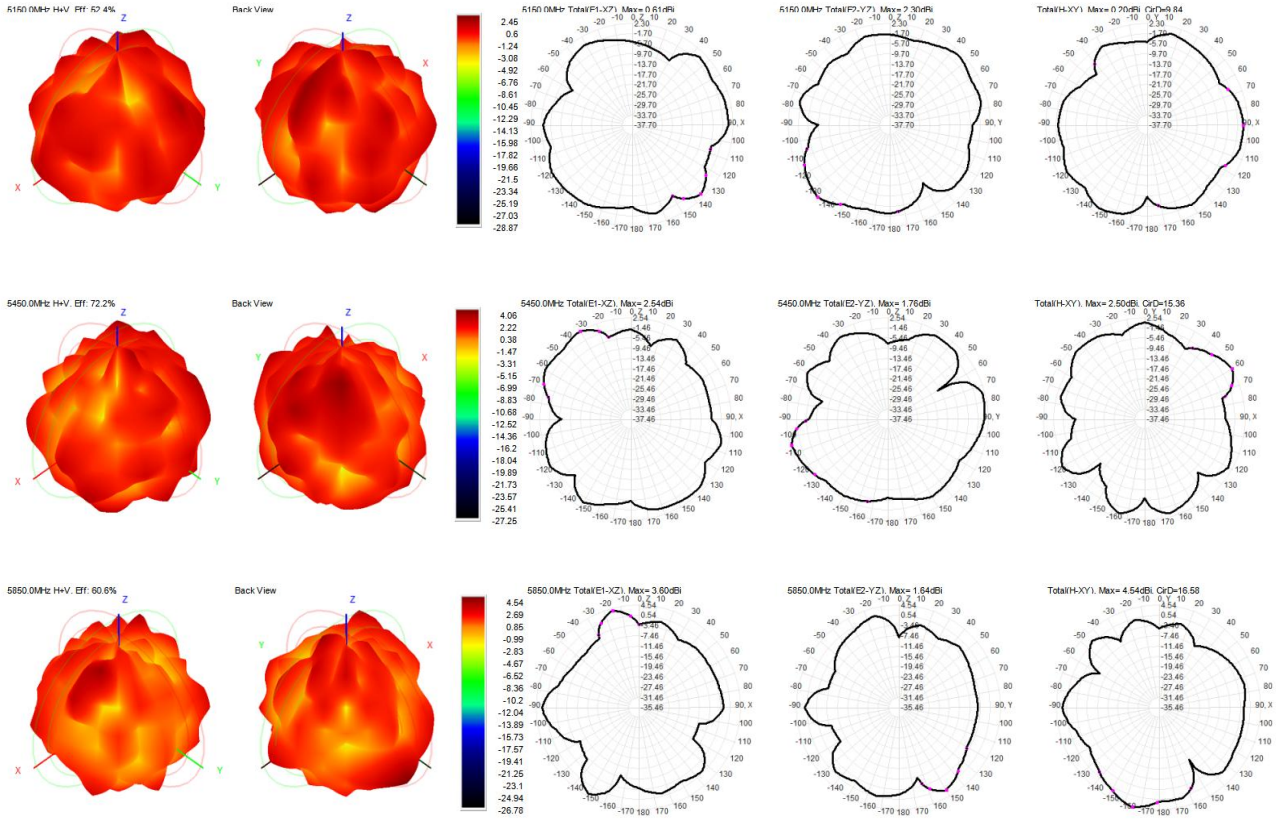

Figure 11 Antenna Pattern Diagram (5GHz)

Copyright © 2026 Shenzhen Ai-Thinker Technology Co., Ltd. All Rights Reserved

8 Design Guide

8.1 Application Reference Circuit

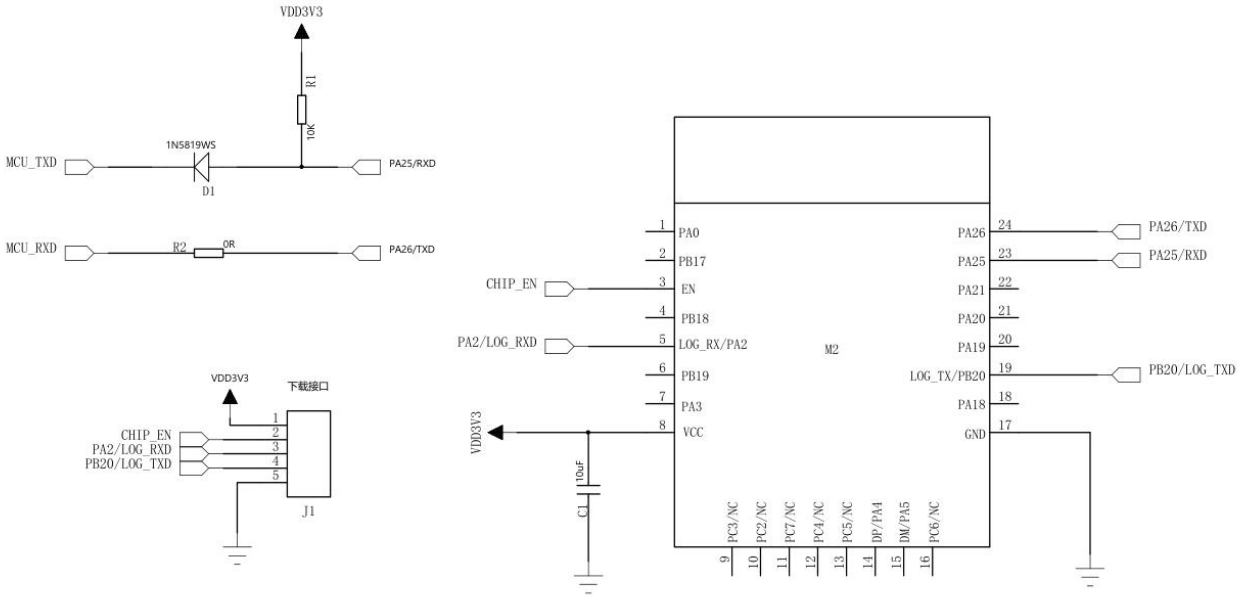

Figure 12 Application Reference Circuit

- LOG_TX is the boot control pin. When high, the module is in normal operating mode. When low, the module is in firmware programming mode. The chip is internally pulled high by default.
- VDD3V3 supply voltage: 2.97 – 3.63V. The external power supply output current is recommended to be above 800mA.
- The power-on timing requirements for PA3 and PB18 must be met in the design.

Copyright © 2026 Shenzhen Ai-Thinker Technology Co., Ltd. All Rights Reserved

8.2 Recommended PCB Footprint Dimensions

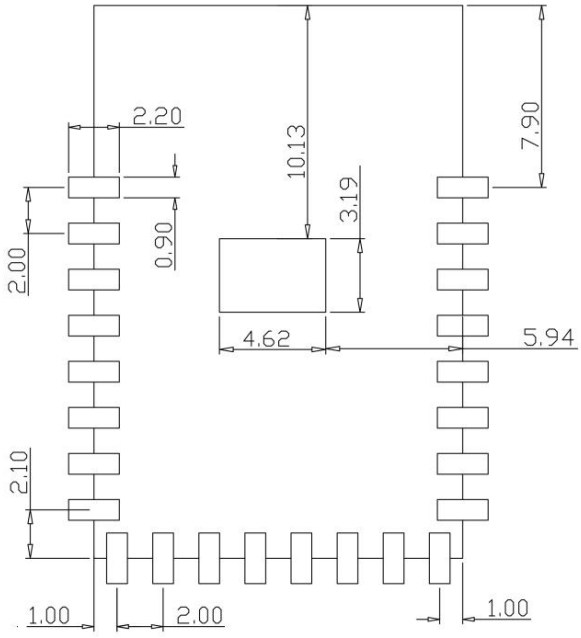

Figure 13 Recommended PCB Footprint Dimensions (Unit: mm)

8.3 Antenna Layout Requirements

- For the installation position on the mainboard, the following two options are recommended.

Option 1: Place the module at the mainboard edge, with the antenna area extending beyond it.

Option 2: Place the module at the mainboard edge, with a clearance cutout at the antenna position.

- To ensure optimal performance of the onboard antenna, metal objects must not be placed near the antenna, and the antenna should be kept away from high-frequency devices.

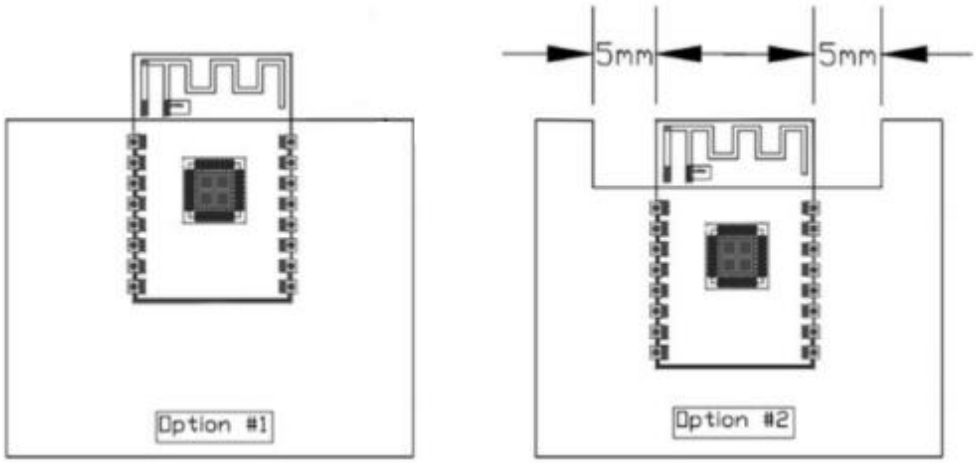

Figure 14 Antenna Layout Diagram

Copyright © 2026 Shenzhen Ai-Thinker Technology Co., Ltd. All Rights Reserved

8.4 Power Supply

- Recommended VDD voltage: 3.3V; recommended current ≥800mA.
- An LDO is recommended for power supply; if using DC-DC, the ripple should be controlled within 30mV.
- For the DC-DC power supply circuit, it is recommended to reserve space for dynamic response capacitors to optimize output ripple under large load transients.
- It is recommended to add ESD protection devices to the power interface.

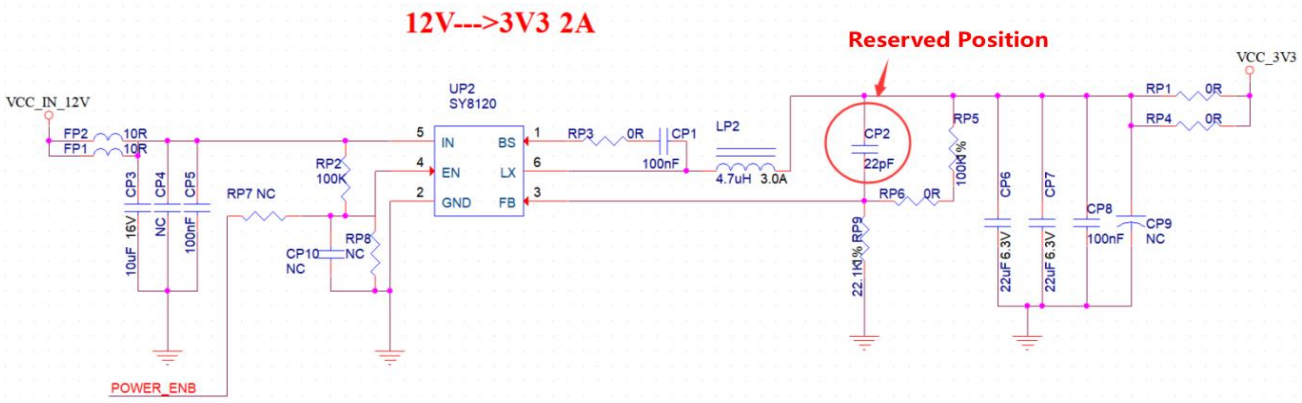

Figure 15 DC-DC Buck Circuit

8.5 GPIO

- Some I/O pins are exposed on the module periphery. To use these I/O pins, it is recommended to connect a 10 – 100Ω resistor in series with each I/O pin. This helps suppress overshoot, stabilize signal levels, and benefits both EMI and ESD protection.
- The pull-up or pull-down configuration for special I/O pins must refer to the instructions in the specification, as it affects the module boot configuration.
- The module I/O pins level is 3.3V. If the host controller I/O voltage level does not match the module, a level-shifting circuit should be added.
- If an I/O pin is directly connected to a peripheral interface or pin headers, it is recommended to reserve space for an ESD protection device near the connector on the I/O trace.

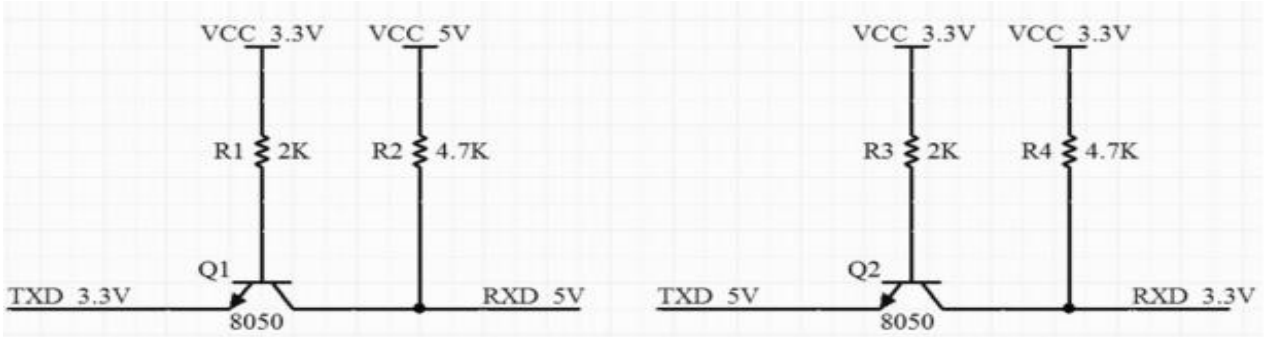

Figure 16 Level-Shifting Circuit

Copyright © 2026 Shenzhen Ai-Thinker Technology Co., Ltd. All Rights Reserved

9 Storage Conditions

Products sealed in moisture barrier bags should be stored in a non-condensing atmosphere at < 40℃ and < 90% RH.

The moisture sensitivity level (MSL) of the module is level 3.

The module must be used within 168 hours after vacuum bag removal under conditions of 25±5℃ and 60% RH. Otherwise, the module requires baking before being returned to production.

10 Reflow Soldering Profile

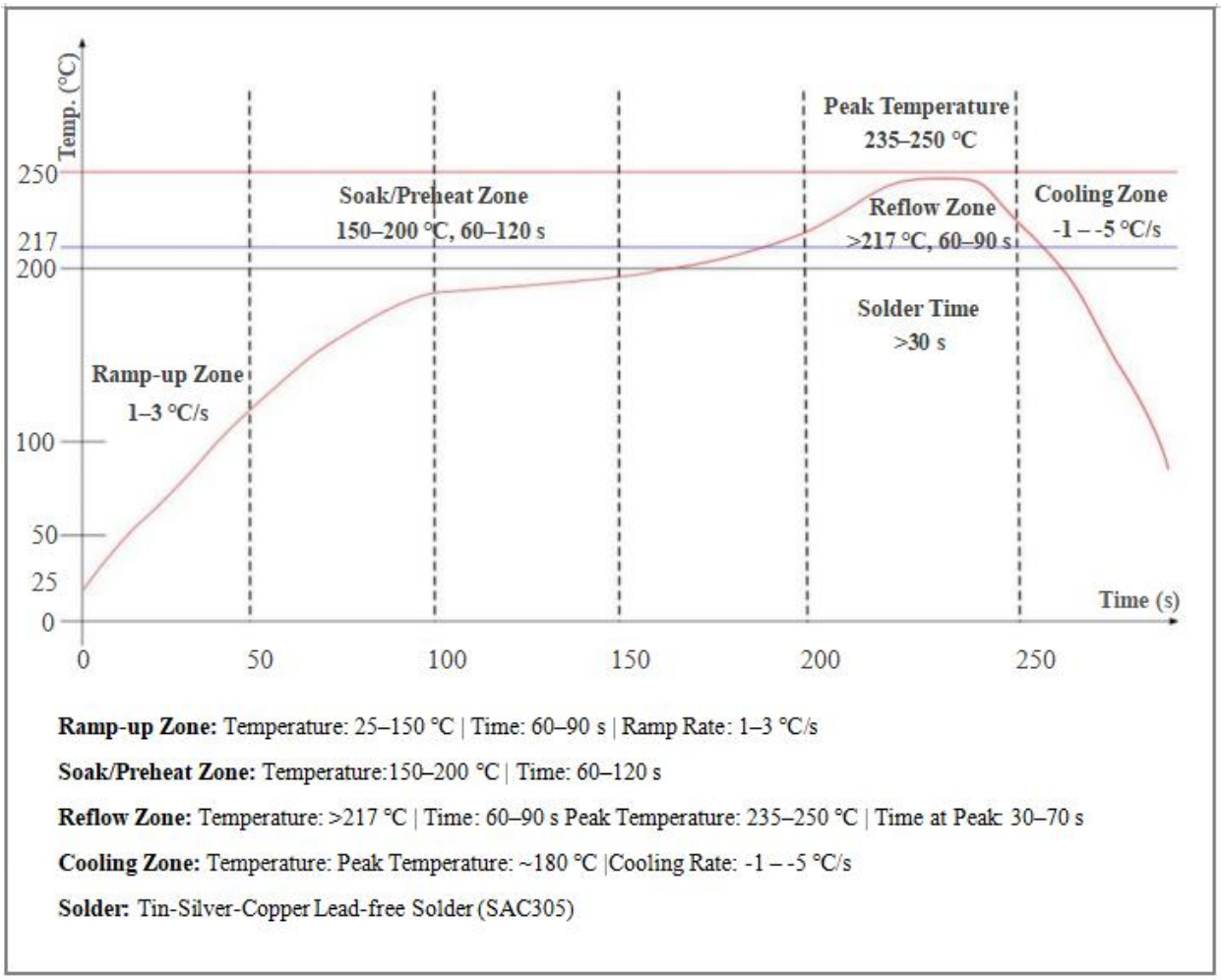

Figure 17 Reflow Soldering Profile

Copyright © 2026 Shenzhen Ai-Thinker Technology Co., Ltd. All Rights Reserved

11 Packaging Information

The BW60-12F module is packaged in tape and reel, 800 pcs/reel.



Figure 18 Tape and Reel Packaging Diagram

12 Contact Us

Official Website Official Forum Development DOCS LinkedIn

Tmall Store Taobao Store Alibaba Store

Technical Support: support@aithinker.com

Domestic Business Cooperation: sales@aithinker.com

Overseas Business Cooperation: overseas@aithinker.com

Company Address: Room 403–405, 408–410, Building C, Huafeng Smart Innovation Port, Gushu, Xixiang, Bao'an District, Shenzhen, Guangdong, China

Contact Hotline: 0755-29162996

WeChat Mini Program

WeChat Official Account

Copyright © 2026 Shenzhen Ai-Thinker Technology Co., Ltd. All Rights Reserved

Disclaimer and Copyright Notice

The information in this document, including referenced URLs, is subject to change without notice.

The document is provided “as is” without warranty of any kind, express or implied, including but not limited to the warranties of merchantability, fitness for a particular purpose, or non-infringement. Furthermore, no warranty is given regarding proposals, specifications, or samples mentioned elsewhere. The publisher bears no responsibility, including for any infringement of patent rights arising from the use of information contained herein. This document does not grant, expressly or impliedly, by estoppel or otherwise, any license to intellectual property rights.

All test data presented herein are obtained from Ai-Thinker laboratories. Actual results may vary slightly.

All trade names, trademarks, and registered trademarks mentioned are the property of their respective owners.

Shenzhen Ai-Thinker Technology Co., Ltd. reserves the final right of interpretation of this document.

Notice

This manual may be updated due to product version upgrades or other reasons.

Shenzhen Ai-Thinker Technology Co., Ltd. reserves the right to modify the content of this manual without prior notice or announcement.

This manual is intended as a usage guide only. While Shenzhen Ai-Thinker Technology Co., Ltd. strives to provide accurate information, it does not guarantee that the content is entirely free of errors. All statements, information, and recommendations in this manual do not constitute any express or implied warranty.

Copyright © 2026 Shenzhen Ai-Thinker Technology Co., Ltd. All Rights Reserved

Important Statement

Shenzhen Ai-Thinker Technology Co., Ltd. (hereinafter "Ai-Thinker") may provide all technical and reliability data (including datasheets), design resources (including reference designs), application or other design advice, web tools, security information, and other resources (collectively referred to as "these Resources") on an "as is" basis, without warranty of any kind, express or implied, including but not limited to warranties of merchantability, fitness for a particular purpose, or non-infringement of any third-party intellectual property rights. Ai-Thinker specifically disclaims any liability for losses, whether direct or consequential, arising from the application or use of any Ai-Thinker products or circuits.

Ai-Thinker reserves the right to modify the content of this document (including but not limited to specifications and product descriptions) and any related products without prior notice. This document automatically supersedes and replaces all previous versions of the same document number.

These Resources are intended for use by skilled developers designing with Ai-Thinker products. You are solely responsible for: (1) Selecting the appropriate Ai-Thinker products for your application; (2) Designing, validating, and operating your application and product throughout its life cycle; (3) Ensuring your application complies with all applicable standards, laws, and any other functional safety, information security, regulatory, or other requirements.

Ai-Thinker may authorize you to use these Resources solely for developing applications incorporating the Ai-Thinker products described herein. No part of these Resources may be copied, reproduced, or distributed in any form without prior written permission from Ai-Thinker. You are not permitted to use any other intellectual property of Ai-Thinker or any third party. You shall fully indemnify Ai-Thinker and its representatives against any claims, damages, costs, losses, or liabilities arising from your use of these Resources, for which Ai-Thinker assumes no liability.

Ai-Thinker's products are supplied under Ai-Thinker's general sales terms and conditions or other applicable terms accompanying the products. The provision of these Resources does not expand or otherwise alter the warranties or warranty disclaimers applicable to the product as delivered.

Copyright © 2026 Shenzhen Ai-Thinker Technology Co., Ltd. All Rights Reserved