RG-02 Specification

High frequency

Version V1.0.1

Copyright ©2022

Copyright © 2022 Shenzhen Ai-Thinker Technology Co., Ltd All Rights Reserved

Document resume

Version	Date	Develop/revise content	Edition	Approve
V1.0.0	2022.08.17	First Edition	Shaoxiang Guo	Hong Xu
V1.0.1	2026.06.01	Update band support	Yingying Chen	Hong Xu

Copyright © 2022 Shenzhen Ai-Thinker Technology Co., Ltd All Rights Reserved

Content

1. Product Overview 4
1.1. Characteristic 4
1.2. Specification parameter 6
2. Main parameters 8
3. Indicator light and button description 9
4. Product Notes 10
5. Contact us 11
Disclaimer and copyright notice 12
Notice 12

Copyright © 2022 Shenzhen Ai-Thinker Technology Co., Ltd All Rights Reserved

1. Product Overview

RG-02 is an indoor LoRaWAN gateway. Supports Semtech data packet transponders and LoRaWAN base station functions, and is compatible with standard LoRaWAN protocols.

The high-frequency RG-02 gateway(863-870MHz) adopts the combination design of SX1302 LoRa RF baseband chip + 2x SX1250 RF front-end, supports 10 programmable parallel demodulator paths. The gateway supports Wi-Fi, Ethernet, 3G/4G cellular network access, and can be easily deployed to various application sites.

The RG-02 is preset with a variety of standard LoRaWAN frequency band options, which can adapt to different countries and regions. And it also supports user-defined frequency bands to build a private LoRa network.

RG-02 can communicate with ABP LoRaWAN terminal nodes without LoRaWAN server, and the data parsing and forwarding functions are realized by the gateway itself. This lightweight deployment method is very convenient for system integrators to access existing IoT applications directly without building LoRaWAN servers or using third-party LoRaWAN services.

1.1. Characteristic

- Open-source OpenWrt system
- Web GUl and SSH are managed through LAN or WiFi
- Analog 49x LoRa demodulator
- 10 programmable parallel demodulator paths
- Pre-configured to support different LoRaWAN regional settings
- Allow custom region parameters
- Support different levels of logon
- Supports Semtech data packet transponders
- Support LoRaWAN base stations
- 3G/4G cellular connection

Copyright © 2022 Shenzhen Ai-Thinker Technology Co., Ltd All Rights Reserved

Copyright © 2022 Shenzhen Ai-Thinker Technology Co., Ltd All Rights Reserved

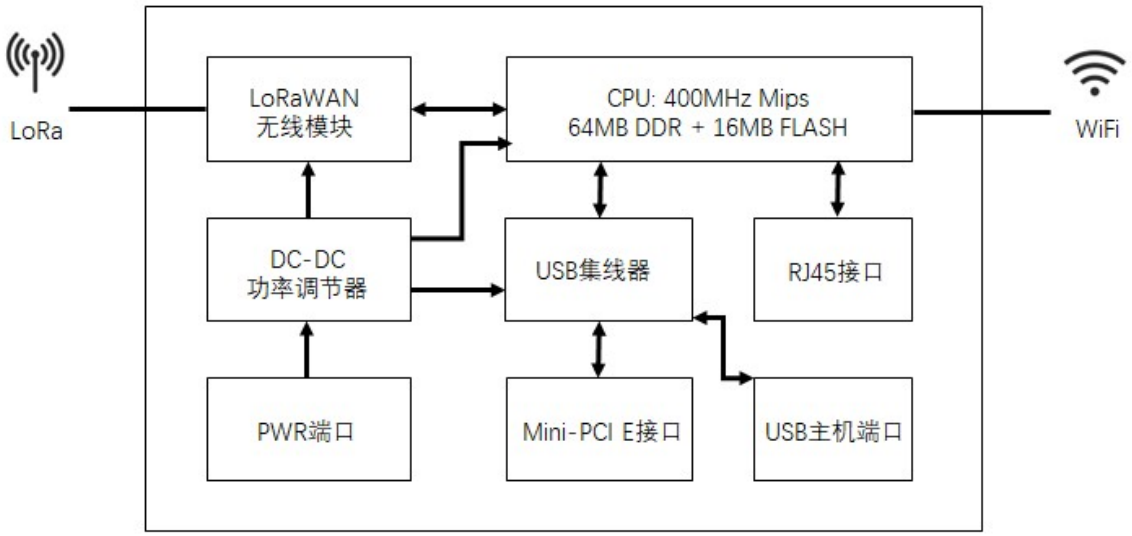

Figure 1 RG-02 gateway architecture

1.2. Specification parameter

■ Hardware system:

✓ AR9331 400MHz

✓ 64MB memory

✓ 16MB flash memory

■ API：

✓ 10M/100M RJ45 port x 1

✓ WiFi:802.11 b/g/n

✓ LoRaWAN Wireless

✓ PowerWAN：5V DC，2A, Type C

✓ USB 2.0 host connector x 1

✓ Mini PCI E connector X 1

✓ SX1302+2 x SX1250

Copyright © 2022 Shenzhen Ai-Thinker Technology Co., Ltd All Rights Reserved

■ WiFi Specification:

✓ IEEE 802.11 b /g/n

✓ Band: 2.4~2.462GHz

✓ 11n transmit power: mcs7/15:11dBm mcs0:17dBm

✓ 11b transmit power: 18dBm

✓ 11g 54M transmit power: 12dBm

✓ 11g 6M transmit power: 18dBm

✓ 11g 54M sensitivity: -71dBm

✓ 11n 20M sensitivity: -67dBm

■ LoRa specifications:

✓ Sensitivity up to -140dBm

✓ Suppression of 70 dB continuous wave interference at 1 MHz offset

✓ Can work under the condition of negative SNR, CCR up to 9dB

✓ Analog 49 x LoRa demodulator and 1 x(G)FSK demodulator

✓ Dual digital transceiver radio front-end interface

✓ 10 programmable parallel demodulator paths

✓ Dynamic data rate (ADR) adaptive

✓ Real Antenna Diversity or Real Simultaneous Dual Band

■ Cellular 4G LTE：

✓ LTE FDD：B1/B3/B5/B7/B8/B20

✓ LTE TDD：B38/B40/B41

✓ WCDMA：B1/B5/B8

✓ GSM/EDGE：B3/B8

✓ Mini SIM card slot

✓ LTE CAT4 Downstream data rate up to 150Mbps

✓ LTE CAT4 Upstream data rate up to 50Mbps

✓ Region: Europe/Middle East/Africa/Korea/Thailand

Copyright © 2022 Shenzhen Ai-Thinker Technology Co., Ltd All Rights Reserved

2. Main parameters

Table 1 main parameters

Model	RG-02 high-frequency edition
LoRa solution	SX1302+2*SX1250
Max. output power	27dBm
Sensitivity	-140.0dBm
CPU	AR9331 400MHz
Memory	64MB DDR + 16MB FLASH
Size	12.0*12.0* 3.0(±0.2)cm
Antenna	Plastic rod antenna (LoRa) + paddle antenna (4G) + PCB antenna(WiFi)
Working Band	EU868/IN865/RU864 Configurable for KR920/AS923/US915/AU915 (for testing)
Frequency setting range	863-870MHz
Power supply	5V@2A
WiFi	IEEE 802.11 b/g/n
Ethernet network	10M/100M

Copyright © 2022 Shenzhen Ai-Thinker Technology Co., Ltd All Rights Reserved

3. Indicator light and button description

Table 5 indicator light status and key function table

Indicator light or button	Network Status	LED status or button function	Remarks
wireless indicator light	Not defined	Not defined	/
System indicator light	LoRaWAN server is not connected	The red light is always on	/
	Connecting to LoRaWAN server	Blue light flashing	
	Connected to LoRaWAN server	The blue light is always on	
Ethernet indicator light	Not connected	Lights off	/
	Connected	The red light is always on and flashing (data activity)	
Power Indicator	No power supply	Lights off	/
	Powered	The red light is always on	
Restore factory settings	/	Reset key	Long press to reset

Copyright © 2022 Shenzhen Ai-Thinker Technology Co., Ltd All Rights Reserved

4. Product Notes

RG-02 Gateway has built-in corresponding RF filters according to different frequency bands. When the gateway is configured to operate at frequencies other than the recommended frequency band, there will be high attenuation and the communication distance will be affected.

Copyright © 2022 Shenzhen Ai-Thinker Technology Co., Ltd All Rights Reserved

5. Contact us

Ai-Thinker official website Official forum Develop DOCS LinkedIn

Tmall shop Taobao shop Alibaba shop

Technic support email: support@aithinker.com

Domestic business cooperation: sales@aithinker.com

Overseas business cooperation: overseas@aithinker.com

Company Address：Room 403,408-410, Block C, Huafeng Smart Innovation Port, Gushu 2nd Road, Xixiang, Baoan District, Shenzhen.

Tel：+86-0755-29162996

CSDN Blog

WeChat official account

Copyright © 2022 Shenzhen Ai-Thinker Technology Co., Ltd All Rights Reserved

Disclaimer and copyright notice

The information in this article, including the URL address for reference, is subject to change without notice.

The document is provided "as is" without any guarantee responsibility, including any guarantee for merchantability, suitability for a specific purpose, or non-infringement, and any guarantee mentioned elsewhere in any proposal, specification or sample. This document does not bear any responsibility, including the responsibility for infringement of any patent rights arising from the use of the information in this document. This document does not grant any license for the use of intellectual property rights in estoppel or other ways, whether express or implied.

The test data obtained in the article are all obtained from Ai-Thinker's laboratory tests, and the actual results may vary slightly.

All brand names, trademarks and registered trademarks mentioned in this article are the property of their respective owners, and it is hereby declared.

The final interpretation right belongs to Shenzhen Ai-Thinker Technology Co., Ltd.

Notice

Due to product version upgrades or other reasons, the contents of this manual may be changed.

Shenzhen Ai-Thinker Technology Co., Ltd. reserves the right to modify the contents of this manual without any notice or prompt.

This manual is only used as a guide. Shenzhen Ai-Thinker Technology Co., Ltd. makes every effort to provide accurate information in this manual. However, Shenzhen Ai-Thinker Technology Co., Ltd. does not guarantee that the contents of the manual are completely free of errors. All statements and information in this manual. And the suggestion does not constitute any express or implied guarantee.

Copyright © 2022 Shenzhen Ai-Thinker Technology Co., Ltd All Rights Reserved